SGUDA U-Lock

Voice and Remote Control Smart Door Lock

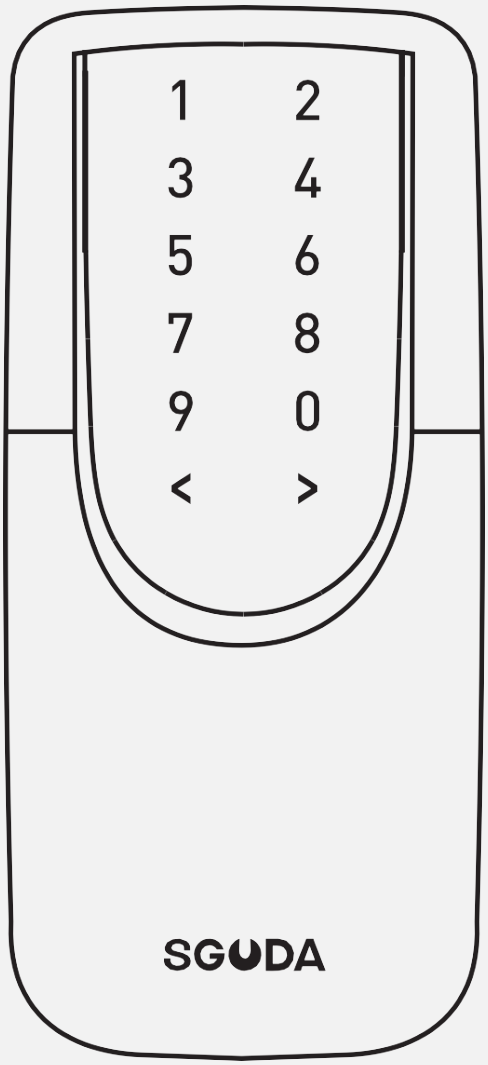

User Manual

Contents

Package Content 4

Interface 5

Drilling Template 6

Latch Backset Adjustment 6

ASSEMBLY INSTRUCTION 7

Pair U-Lock with the SGUDA app 14

SGUDA app Interface 17

User Access overview 18

Connection status 19

Normal/Open/Private mode setting 21

Normal mode (N) 21

Open mode (O) 21

Private mode (P) 22

Add user access 23

App Permission 23

3 access levels 25

3 access modes (Guest) 25

Passcode Only 26

Settings Introduction 28

Keyless Access 29

Fingerprints hiding passcode 29

Preamble Passcode 29

Change Door handing 29

Change Wifi 30

Auto-Lock 30

Customized Sound and LED light(Bluetooth connected) 31

Sound 31

LED Light 32

S/N number 33

Siri, Alexa, Google Assistant 33

Siri 33

Alexa 34

Google Assistant 37

Notification Setting 42

Update Bluetooth and Wifi 43

Bluetooth 43

Wifi 45

Unlink U-Lock 47

Reset U-Lock 48

Package Content

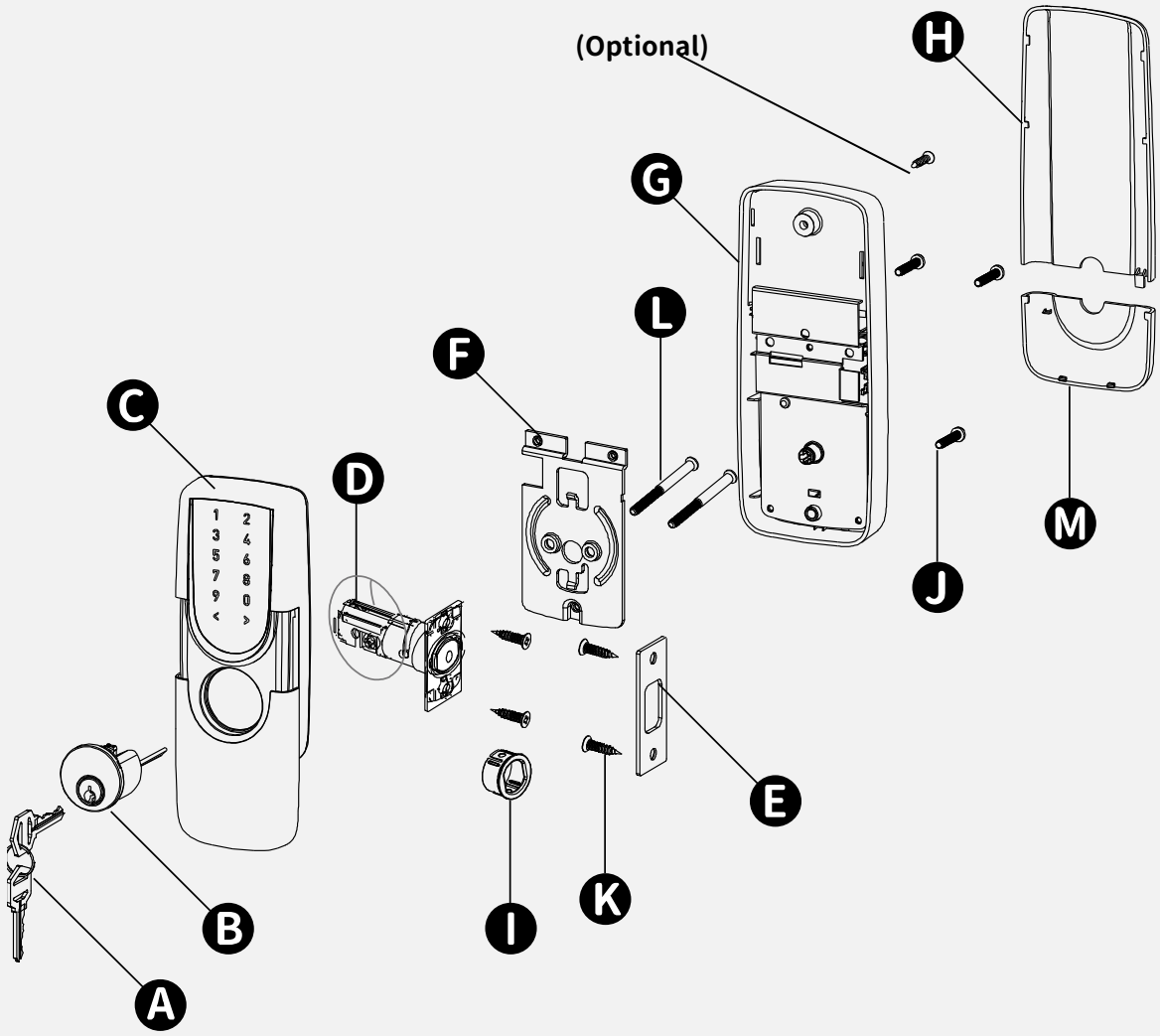

Part	Description	Qty.
A	Key	2
B	Cylinder	1
C	Keypad Module	1
D	Deadbolt Latch	1
E	Strike Plate	1
F	Mounting Plate	1
G	Receiver Module	1

Part	Description	Qty.
H	Battery Cover	2
I	Drive-in Sleeve	1
J	Short Screws	3
K	Wood Screws	5
L	Deadbolt Chassis Screws	4
M	Bottom Cover	1

Interface

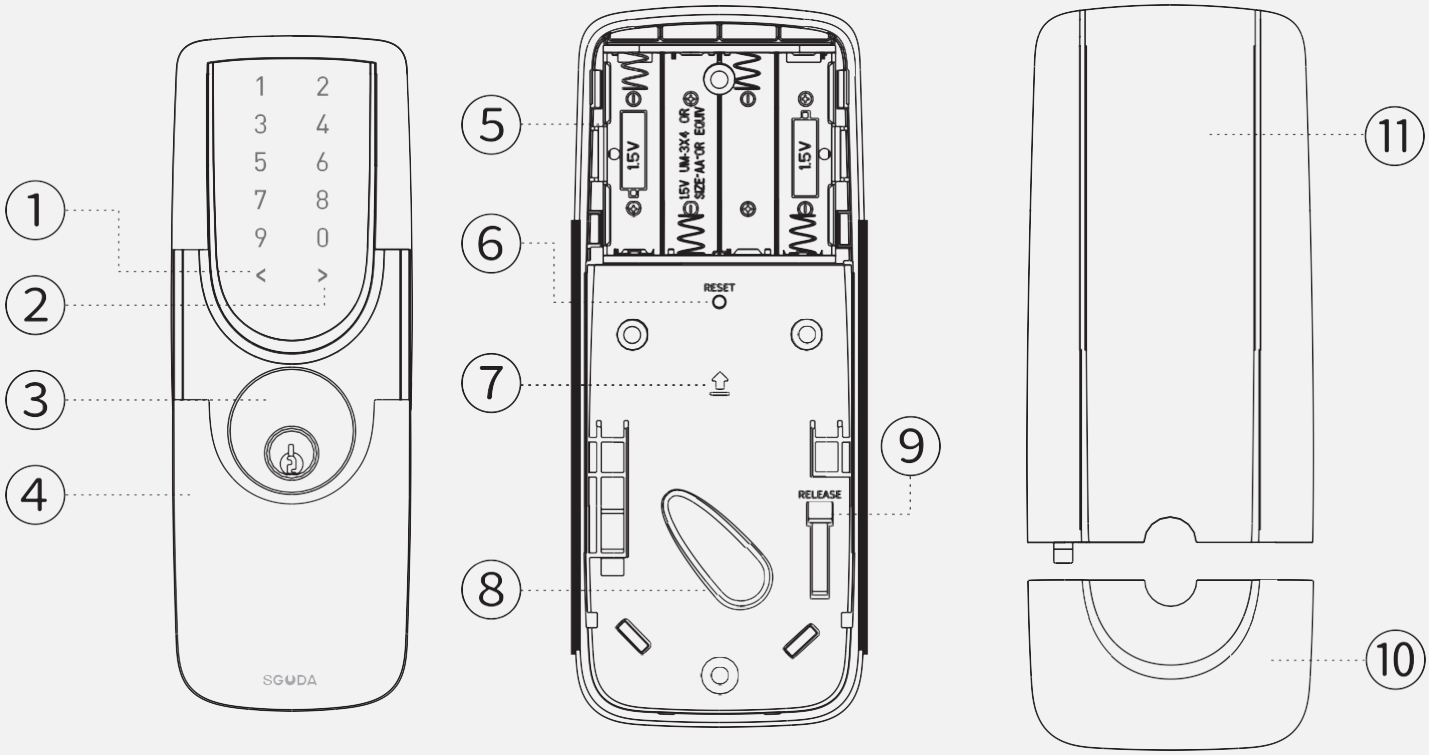

① **Cancel Button** To cancel settings	⑥ **Reset Button** Restore default seetings
② **Enter Button** To confirm settings	⑦ **Arrow** Assemble direction
③ **Cylinder** To lock/unlock the lockset by key from outside	⑧ **Turn Button**
④ **Sliding Lid** Slide up and down to close or reveal the cylinder	⑨ **Disassemble the Turn-piece Case** Press and slide the bottom case downward to disassemble
⑤ **Battery Holder** Insert AAA batteries x 4	⑩ **Bottom Case** ⑪ **Slide Lid**

Drilling Template

Print the original size for drilling

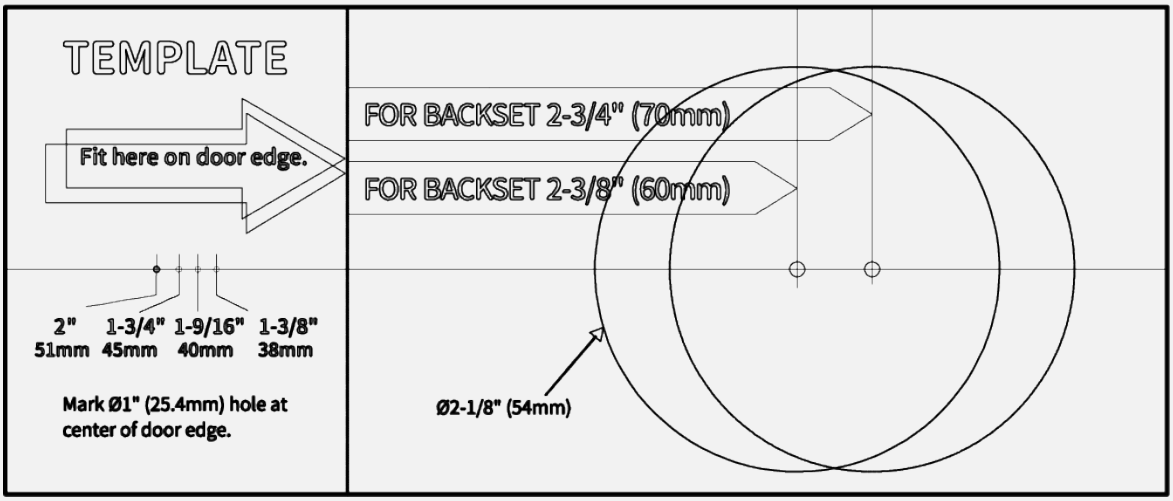

Latch Backset Adjustment

Determine if the latch needs to be adjusted to the 2-3/4”(70mm) backset. To adjust, rotate the latch it stops. Reverse the direction to return to the 2-3/8” (60mm) backset.

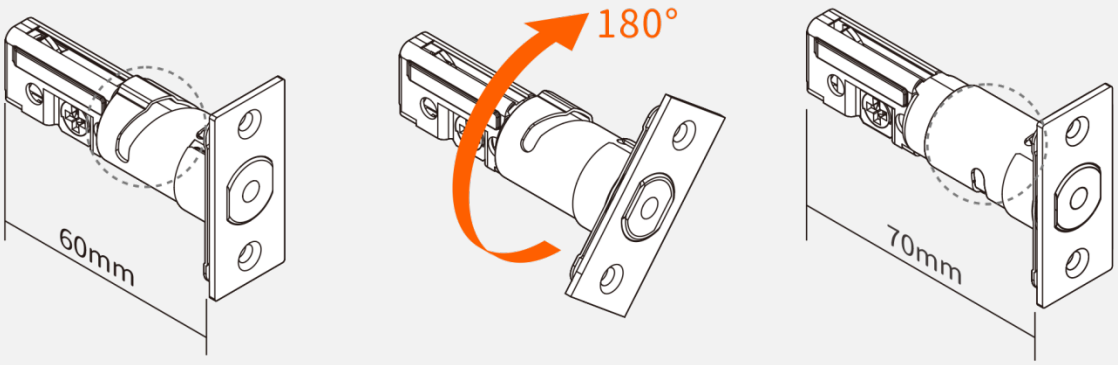

60mm (2-3/8")

70mm (2-3/4")

1.

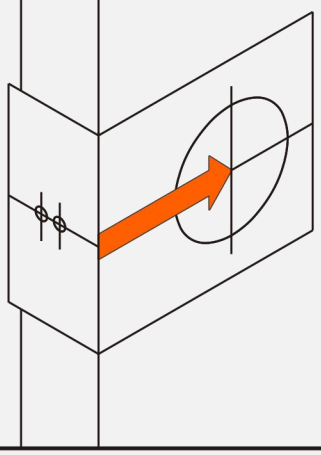

Backset determination

Backset is a distance from door edge to center of hole on door face.

Adjustable Ⓓ **Latch** fits both backset of 2 3/8" (60 mm) and 2 3/4" (70 mm).

2.

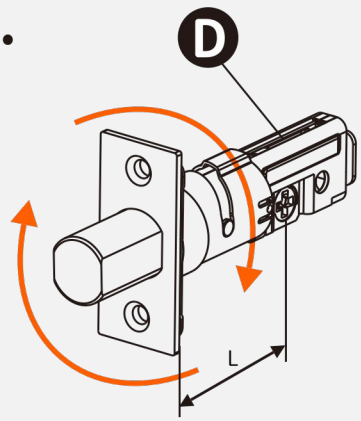

L: 2-3/4" (70mm)

Latch Backset Adjustment

Determine if the Ⓓ **Latch** needs to be adjusted to the 2 3/4" (70 mm) backset.
To adjust, rotate the Ⓓ **Latch** until it stops.
Reverse the direction to return to the 2 3/8" (60 mm) backset.

3.

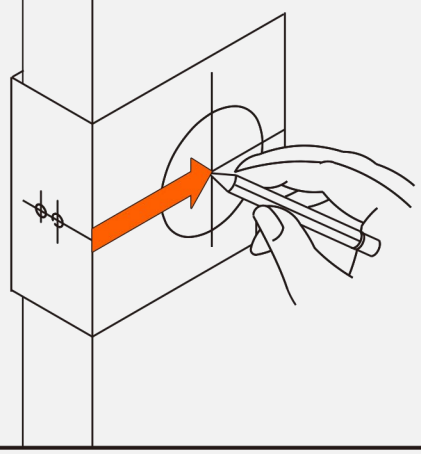

Mark the Door with Template

Select the height and backset as desired on the door face; use the **TEMPLATE** as an indication to mark the center of the circle on the door face and the center of the door edge.

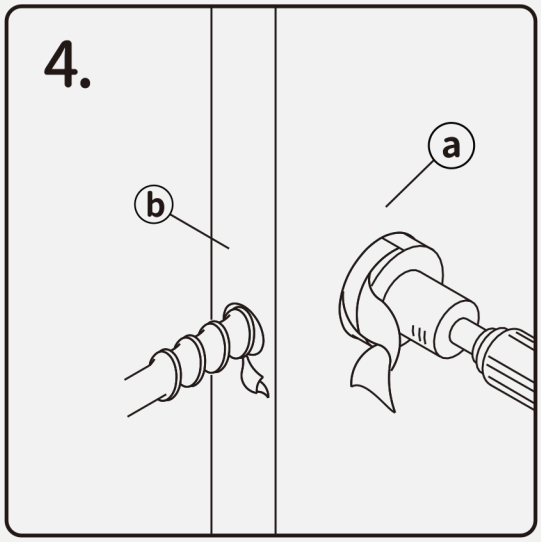

Drill Holes

Using the marks as a guide to drill a hole Ø2 1/8" (54 mm) through the ⓐ door face for the lockset, then a hole of Ø1" (25.4 mm) ⓑ for latch.

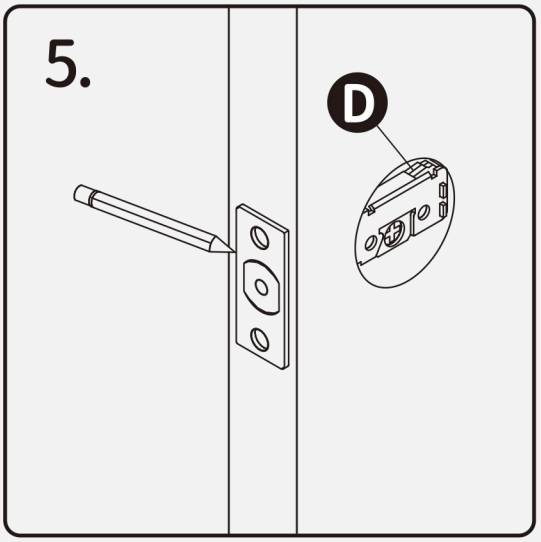

Mark the Outline of Latch Faceplate

Insert the Ⓓ **Latch** and ensure it is parallel to the door face. Mark the outline of the faceplate, then take out the Ⓓ **Latch**.

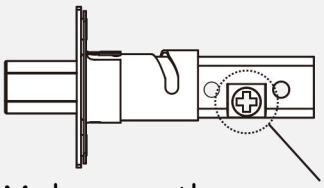

Make sure the cross in the latch is on the bottom

Note: It is not necessary to chisel the door edge for the faceplate installation if you use the drive-in latch.

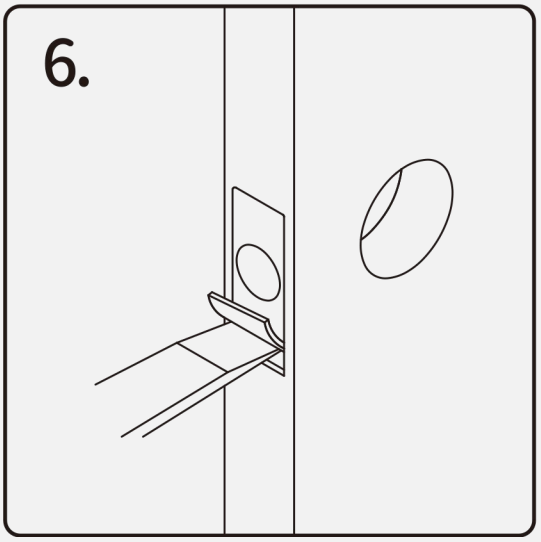

Chisel Space for Latch Faceplate

Chisel 5/32" (4 mm) deep along the outline to allow the faceplate to be aligned with the door edge.

Note: It is not necessary to chisel the door edge for the faceplate installation if you use the drive-in latch.

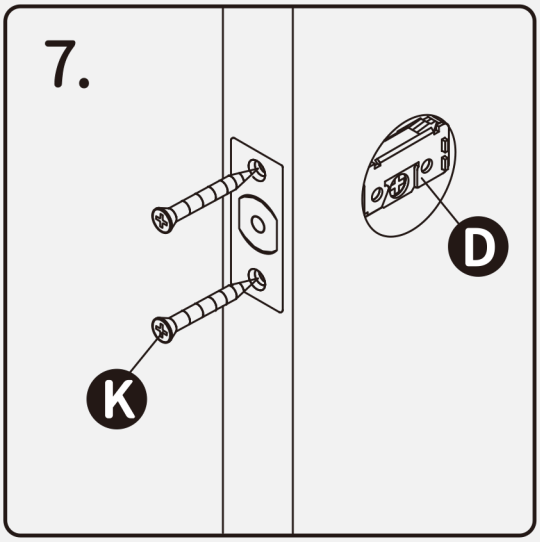

Install Latch

Insert the Ⓓ **Latch** into the door. (Make sure the cross is on the bottom of the Latch.)
Use 2 Ⓚ Wood Screws to secure Latch.

Please do not fully tighten the screws until lock is completely installed.

Ⓚ Wood Screws x 2

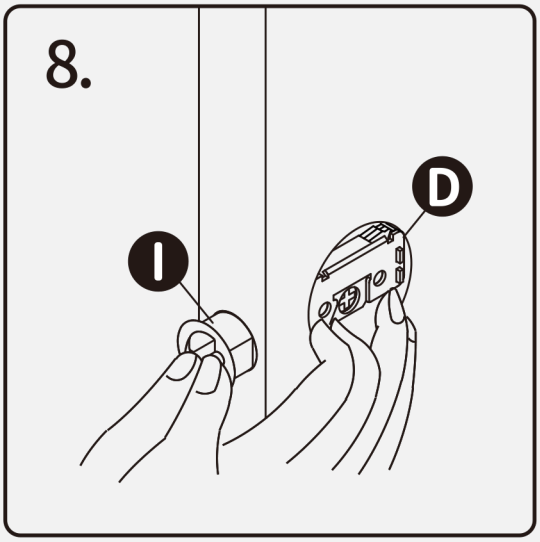

Install Drive-in Latch

Drive the Ⓓ **Latch** into the hole on edge of door.

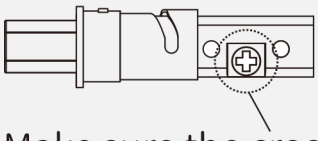

Make sure the cross in the latch is on the bottom.

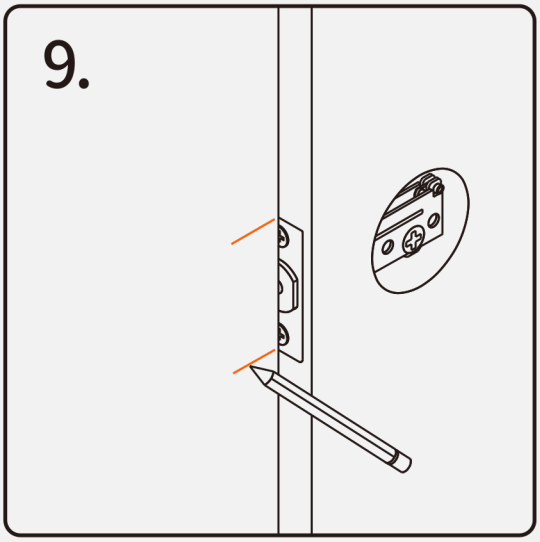

Mark the Outline of Strike

To identify the center of strike: close the door to lay the latchbolt against the door frame.

Mark the center line on the doorframe exactly opposite the latch hole in the door edge.

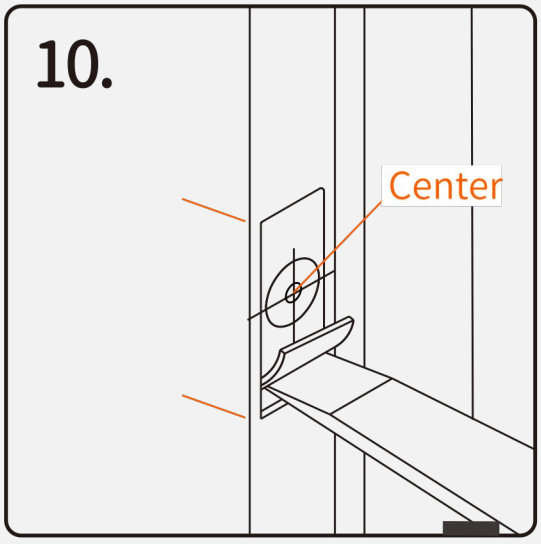

Drill Hole on Door Frame

1、Measure one half of door thickness from door stop and vertically mark center line of strike. Drill 1" (25.4 mm) hole, 1" (25.4 mm) deep at intersection of horizontal and vertical line of strike.

2、Chisel 5/64" (2 mm) deep along the strike outline to allow the strike to be aligned with the doorframe.

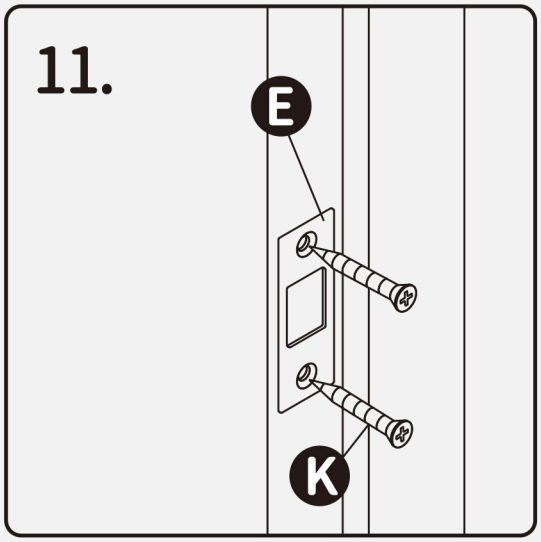

Install Strike on Door Frame

Install the E Strike Plate into your door frame and tighten with K Wood Screws.

K Wood Screws x 2

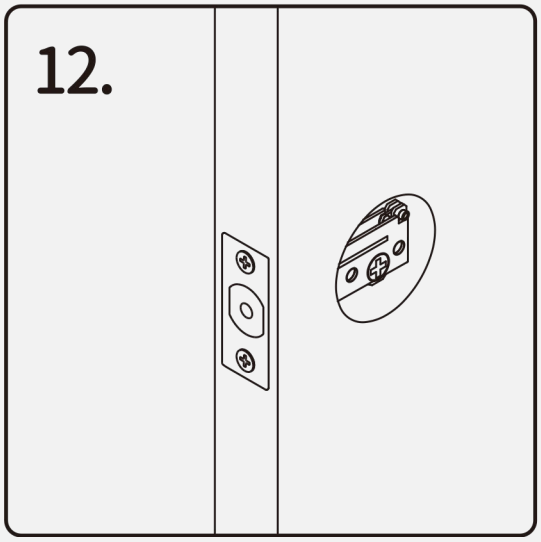

Install Keypad Assembly #1

Make sure the latch bolt is retracted.

13.

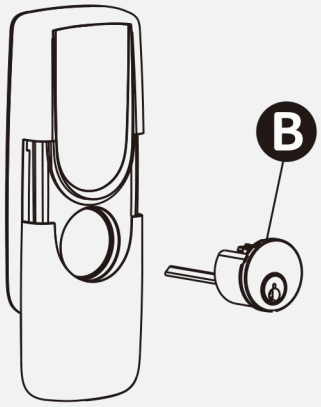

Install Keypad Assembly #2

Install Ⓑ **Cylinder** into the Keypad assembly with tailpiece in horizontal position inserted through hub of the latch.

14.

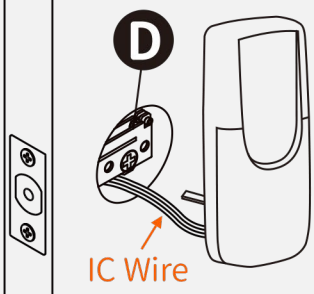

Install Keypad Assembly #3

Pass the **IC Wire** under the Ⓓ **Latch** to the interior side of the door, and insert the tailpiece through the cross-shaped crank of the latch

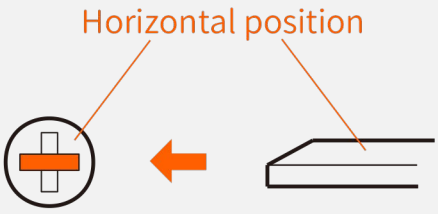

15.

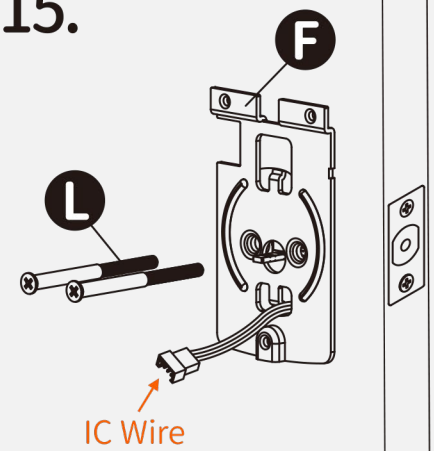

Install Inside Mounting Plate

Pass the IC Wire through the wire hole of the Ⓕ **Mounting Plate**. Fix the Mounting Plate with Ⓛ **Deadbolt Chassis Screws**.
If outside lock assembly is lopsided, please loosen the Screws to adjust its position and tighten the Screws again.

Ⓛ **Deadbolt Chassis Screws x2** (*Page 3)

16.

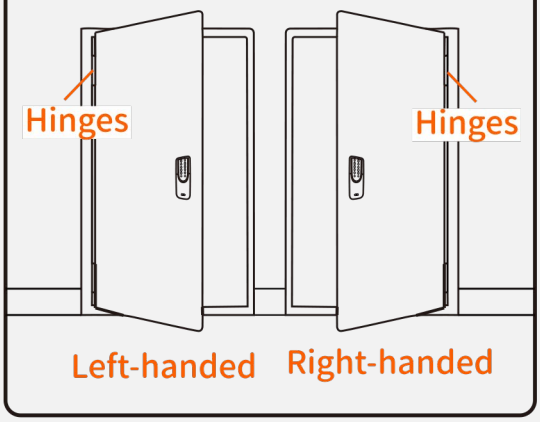

Identify Door Handing

Face the door from the outside. The door is Left-handed if the Hinges are on the left side of the door, whereas the door is Right-handed if the Hinges are on the right side of the door.

17.

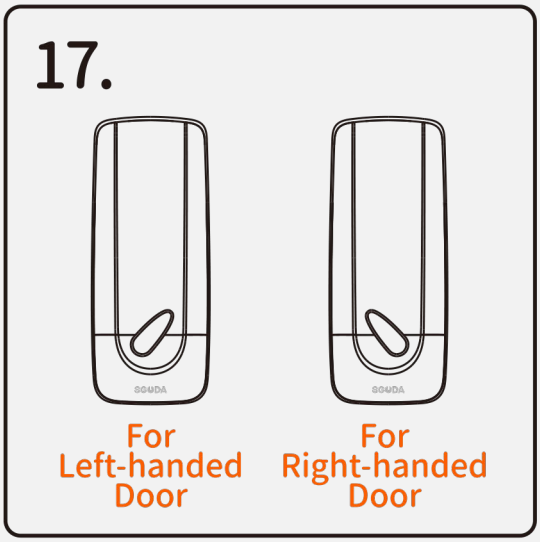

Adjust Thumb Turn Piece

Rotate the thumb turn piece to the LEFT at 45 degrees For Right-handed Doors.

Rotate the thumb turn piece to the RIGHT at 45 degrees For Left-handed Doors.

Note: The thumb turn piece is opposite to the latching side.

18.

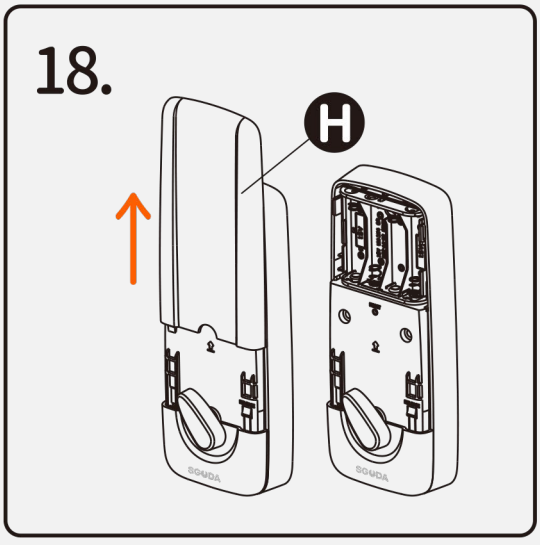

Install Receiver Module

Remove the Ⓗ **Battery Cover**.

(push it up first then pull it out.)

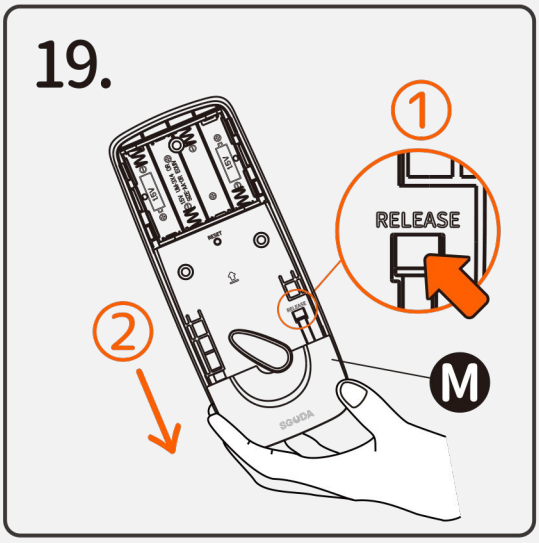

Install Receiver Module

Press “**RELEASE**” and slide the Ⓜ **Bottom Case** to remove.

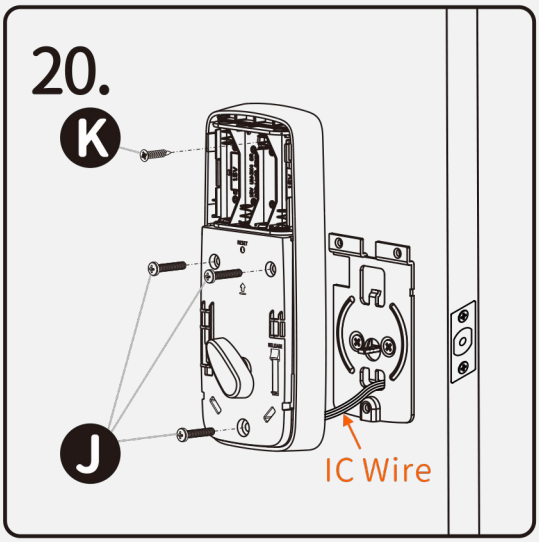

Install Receiver Module

Connect the **IC Wire** into the back of the **Receiver Module**. Ensure that the deadbolt tailpiece is engaged with turn piece, then attach **Receiver Module** to the door with Ⓙ **Screw**. Use the optional Ⓚ **Wood Screw** to secure the **Receiver Module** to wood doors only.

Ⓚ **Wood Screw x 1**

Ⓙ **Machine Screws x 3**

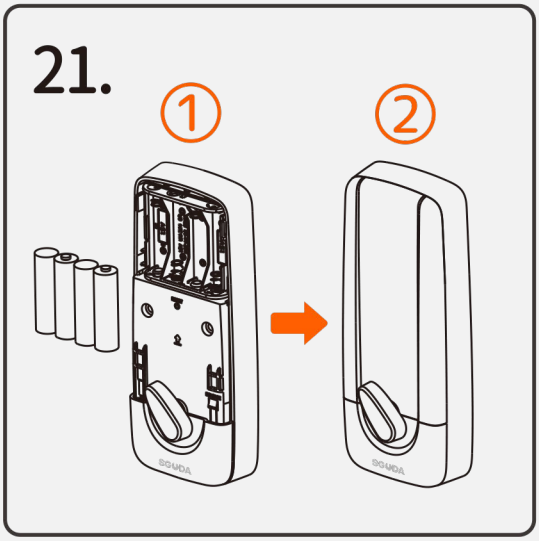

Insert Batteries

① Complete Assembling with Battery Cover

② Insert AAA Battaries x4

Pair U-Lock with the SGUDA app

1. Download the app on Apple store or Google play

2. Select from the following platforms to register an account

3. Go to Menu on the top left corner>Press "+Setup Device" > Select your lock

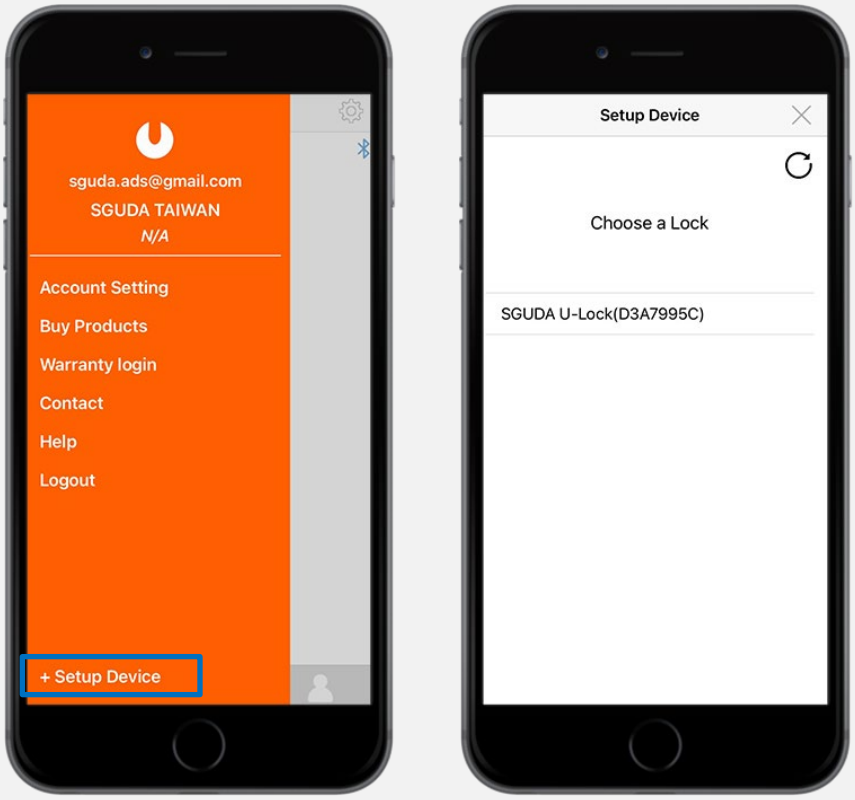

4. Set the name for Home and the Lock

5. Connect to the Wifi

6. Identify door handing and follow the instruction

SGUDA app Interface

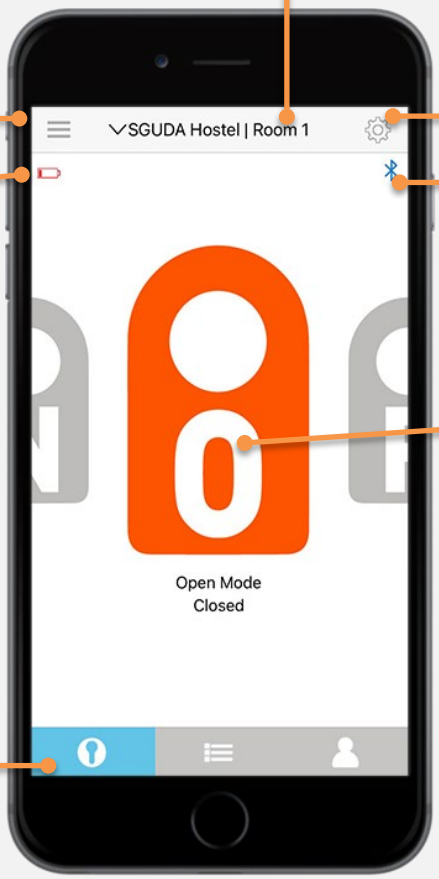

Page 1: Lock mode

Page 2: Activity Log

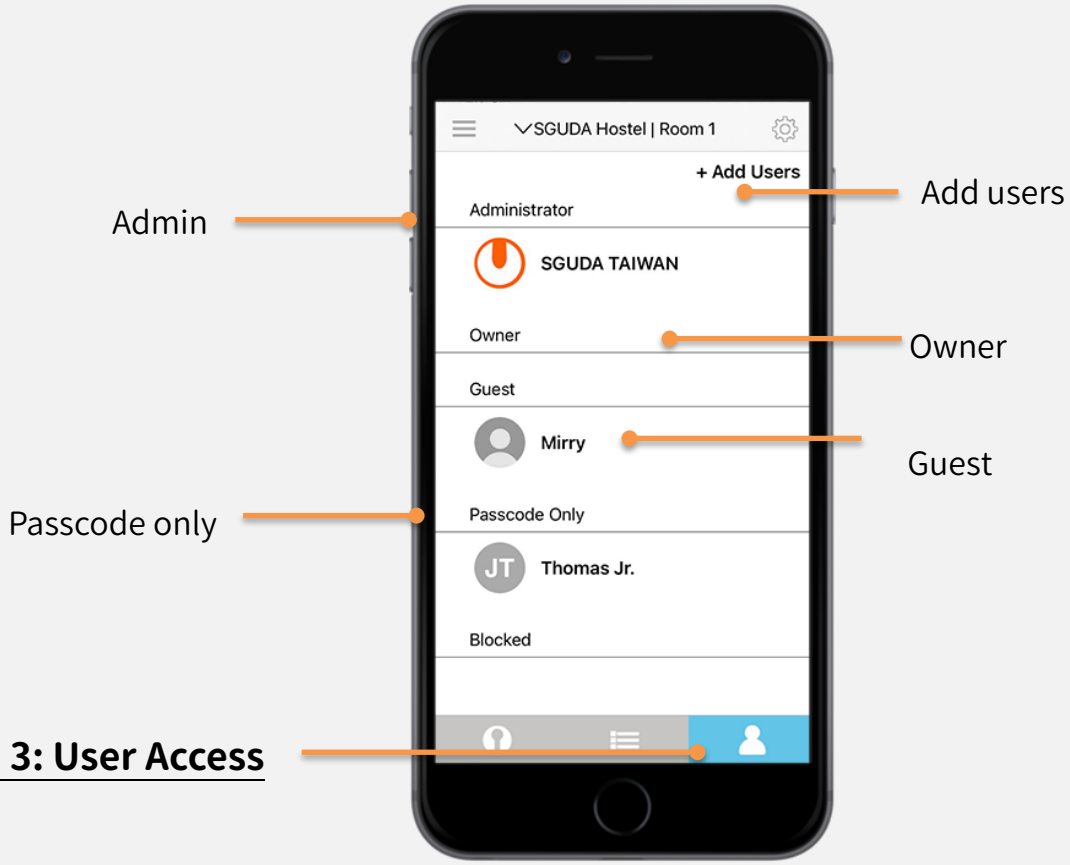

User Access overview

There are three roles (Admin, Owner, Guest) to access the door. Support up to 60 users.

1. **Admin:** The person who has paired U-lock will be an Admin as default. Admin can give up the role of "Admin" to another person.

- ✓ Swipe to switch modes (Normal, Private, Open mode)
- ✓ Add, delete owners and guests
- ✓ Access to the Activity log
- ✓ Lock Settings
- ✓ Remote Lock/Unlock the door

2. **Owner**

- ✓ Add, delete owners and guests

- ✓ Access to the Activity log
- ✓ Lock Settings
- ✓ Remote Lock/Unlock the door

3. **Guest**

- ✓ Passcode lock/unlock the door
- ✓ Passcode lock/unlock, remote lock/unlock the door

Connection status

1. Not connecting to the Wifi

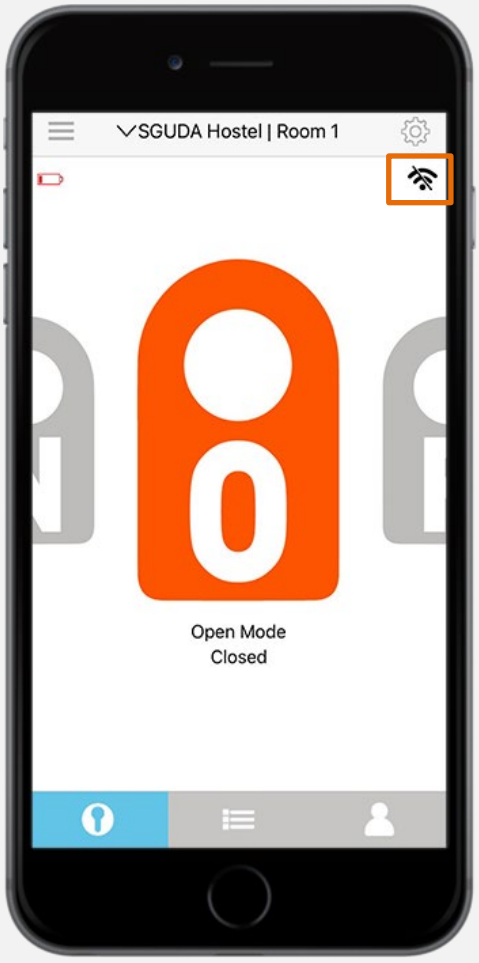

2. Wifi connected

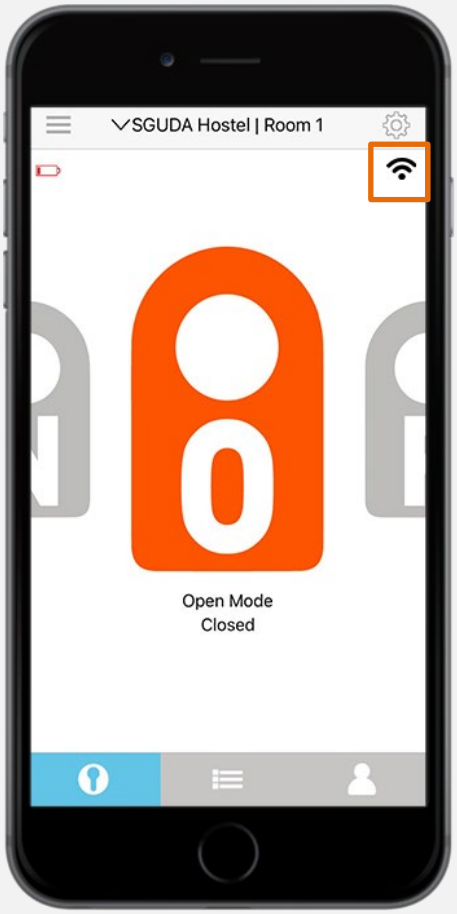

3. Bluetooth connected

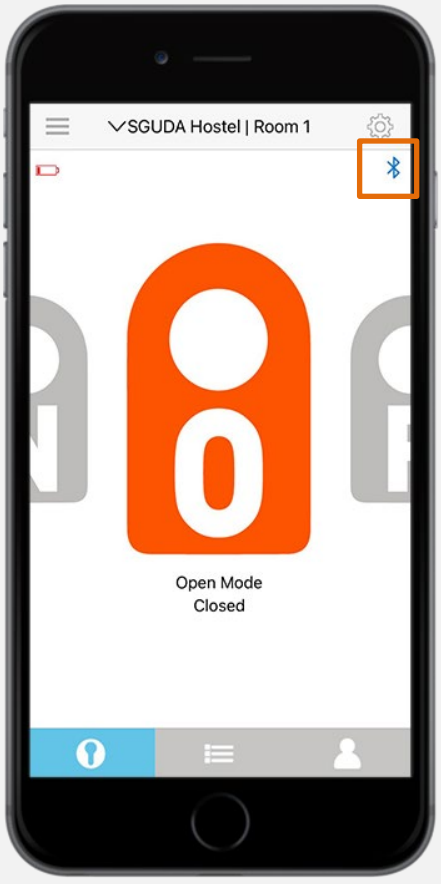

Normal/Open/Private mode setting

Swipe left or right to switch different modes

Normal mode (N)

Four ways entry

- ✓ Remote lock/unlock
- ✓ Passcode unlock
- ✓ Bluetooth unlock

Open mode (O)

The door stays unlock, suitable for office or during a house party

Private mode (P)

Besides the selected users, no one is allowed to enter the room, suitable for private meetings or other special occasions

Add user access

App Permission

1. Go to > +Add users >App Permission

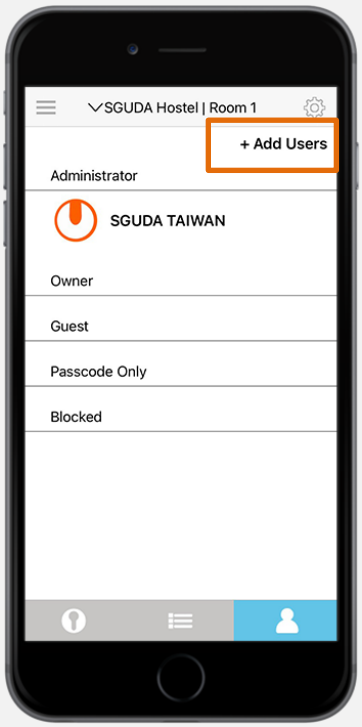

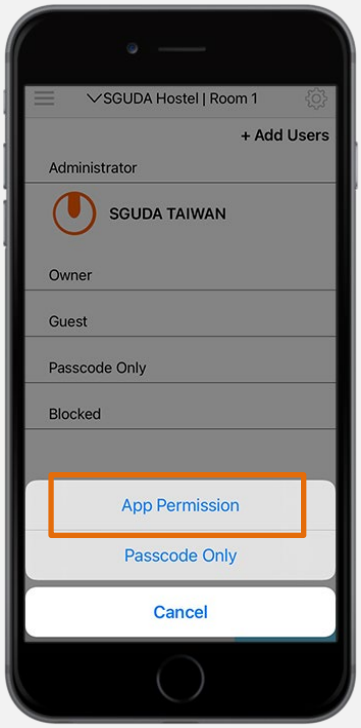

2. Input the **email** and **name** of the user (Note: The person who can be added by email must download the SGUDA app and register an account first.)

3. There are 3 access levels* (Owner, Guest, and Blocked)

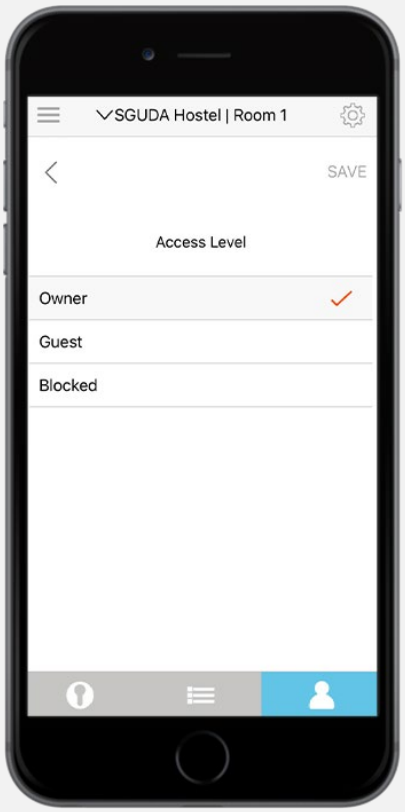

4. Add user

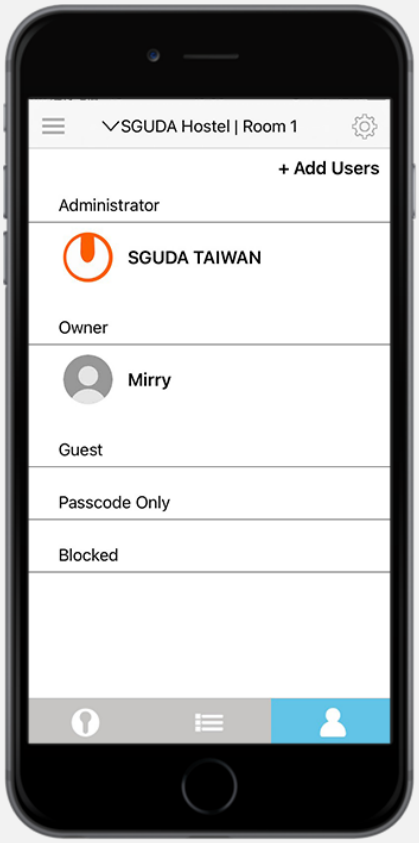

Note:

3 access levels

1. **Owner**: Access to add/delete user, activity feed, Lock setting, lock/unlock the door via the SGUDA app

2. **Guest**: Enter code to unlock or lock/unlock via the SGUDA app, 3 access modes*

3. **Blocked**: The user who's been blocked has no permission to the door

3 access modes (Guest)

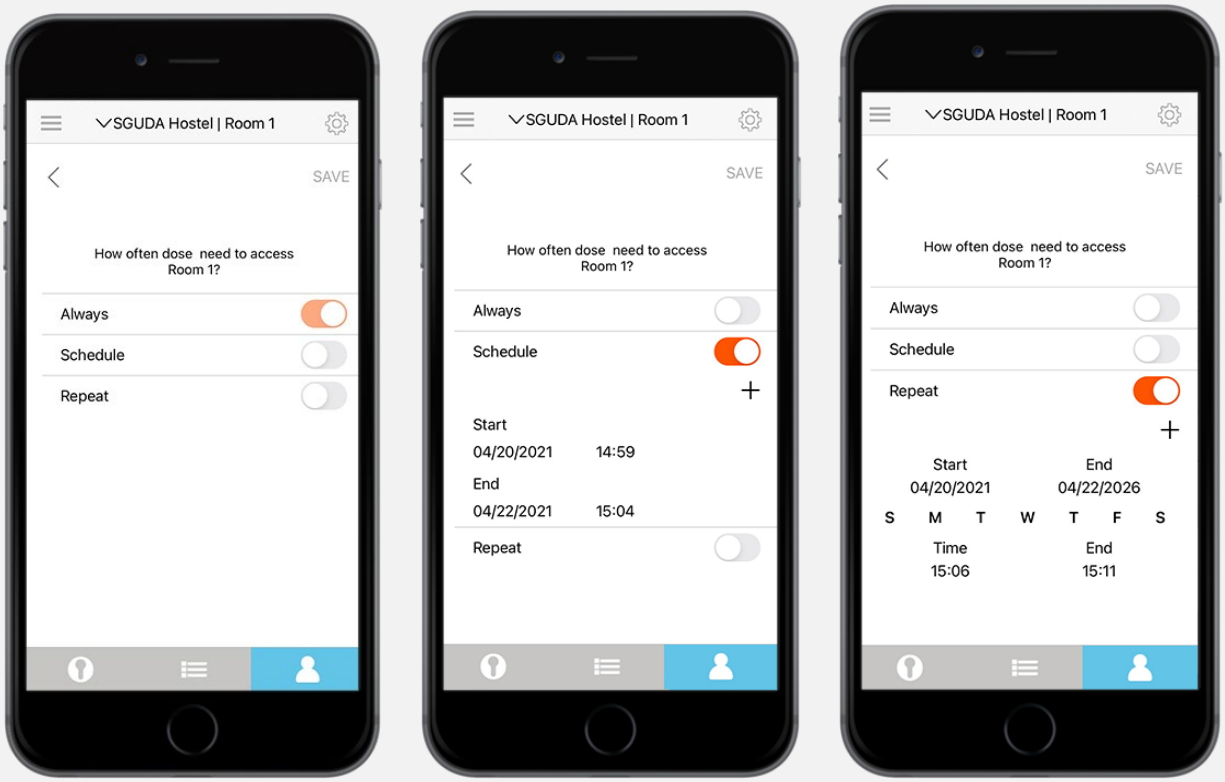

1. **Always**: always has the access to the house anytime

2. **Schedule**: Set start and end dates/times for the guests.

3. **Repeat**: Set start and end dates/times by week for the guests. (For example, Dog walker, nanny, etc.)

Passcode Only

1. Go to > +Add users > Passcode Only

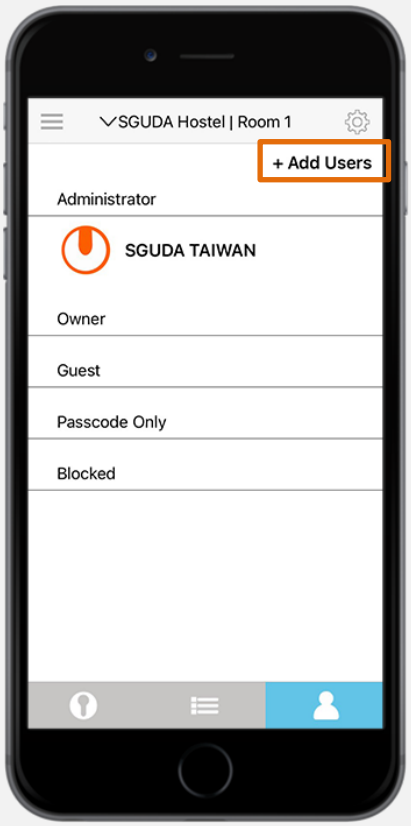

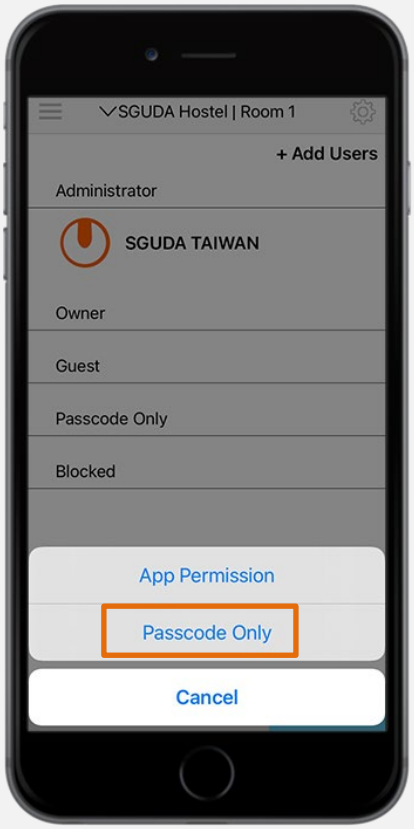

2. Enter the guest's name

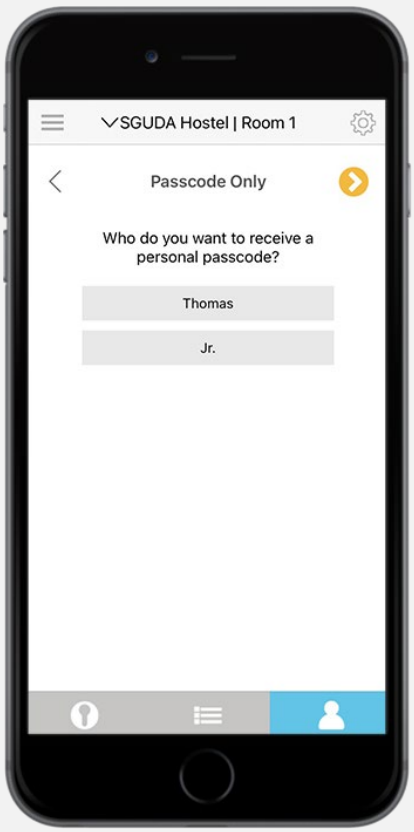

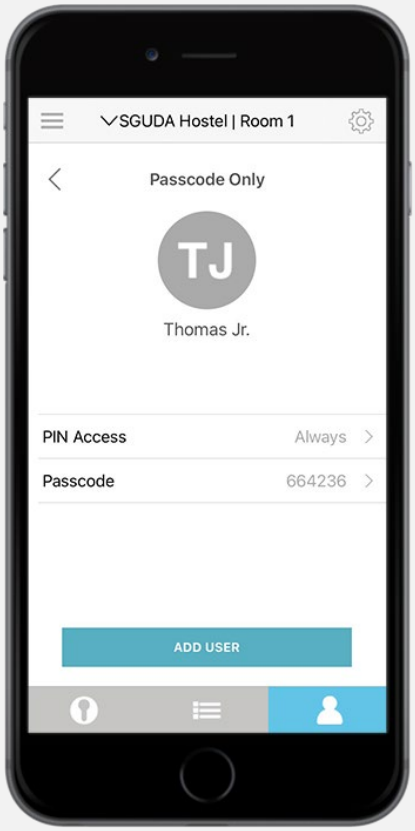

3. It also has 3 access modes* for the Passcode users (Always, Schedule and Repeat)

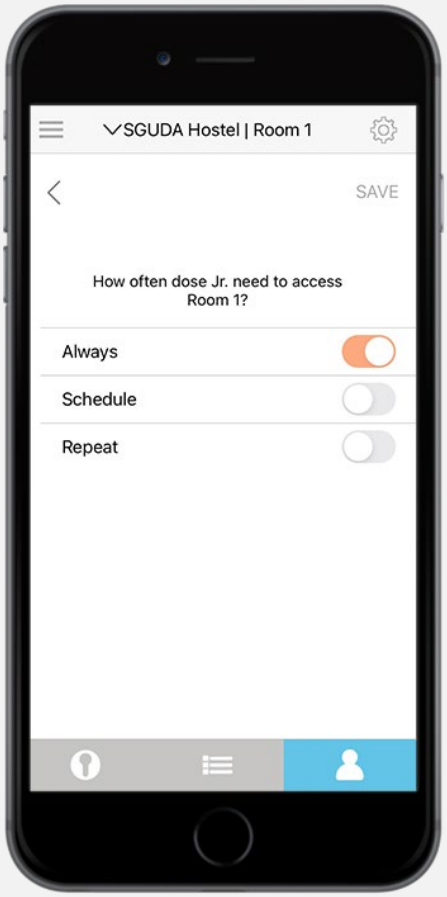

4. Create a passcode or use the random default passcode > Save > Add user

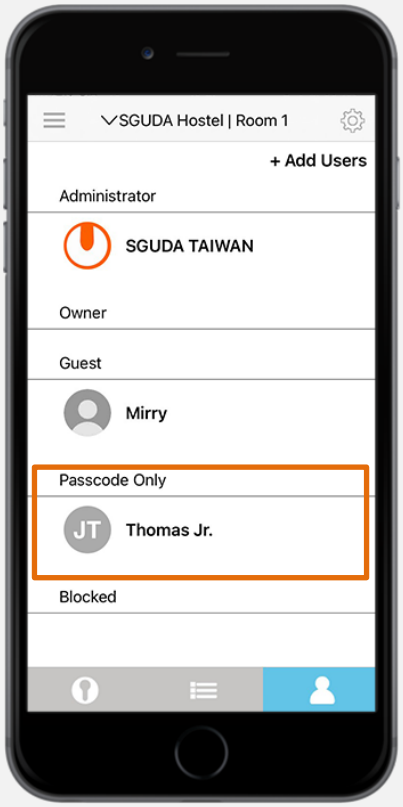

Settings Introduction

Go to Settings on the top right corner > select "lock settings"

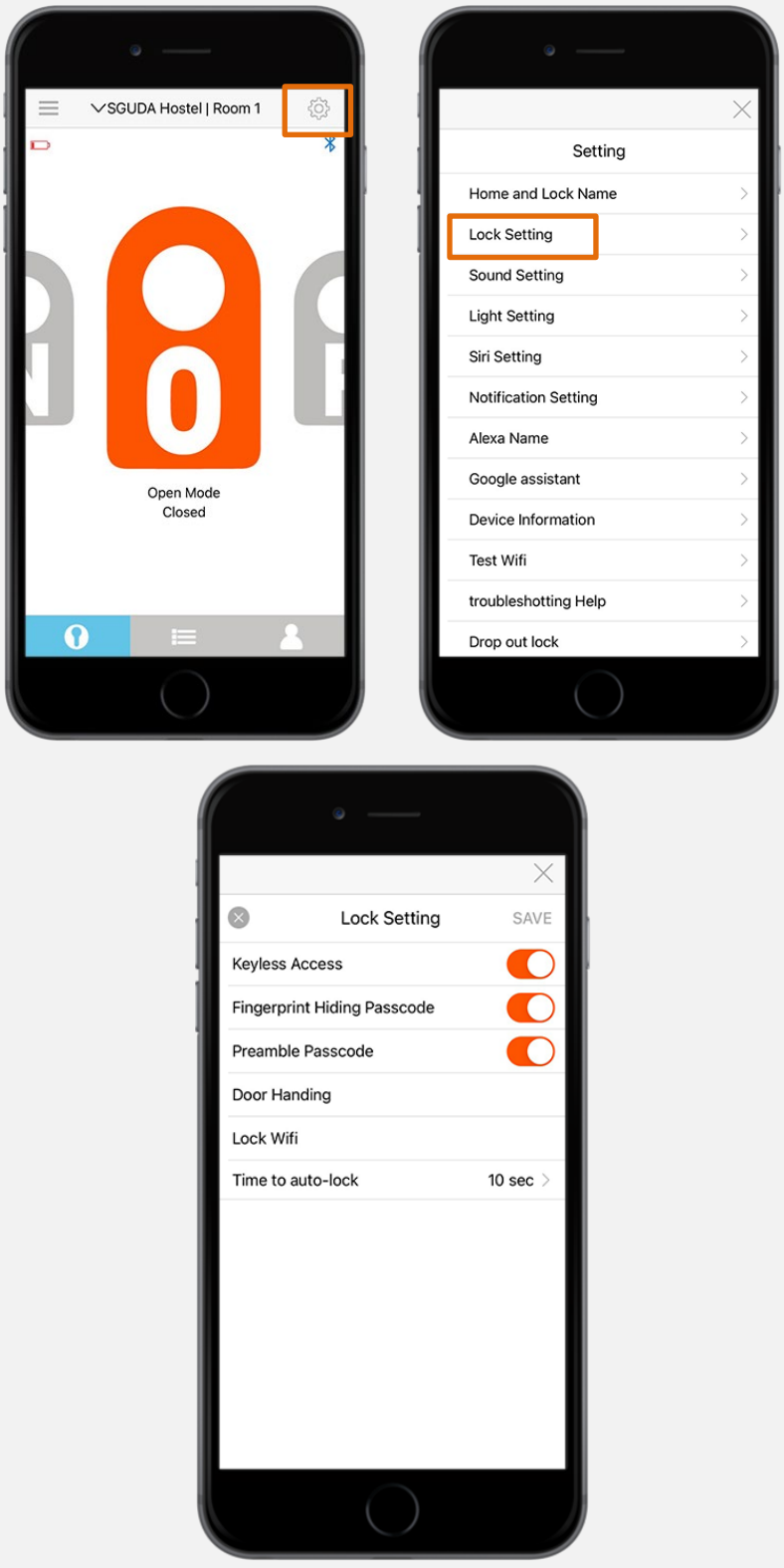

Keyless Access

Open the door with one simple touch

Fingerprints hiding passcode

Enter random codes before and after the actual codes to protect privacy.

For example, your actual code is "123456", input random codes before and after as

*****123456*****

Preamble Passcode

Press random numbers show on the touchscreen keypad before you enter the actual passcode

Change Door handing

Choose your "Lock Position"

Change Wifi

Select "Lock Wifi" to change the Wifi

Auto-Lock

Set a time (10, 30, 60, 90, 120 seconds) for the door to lock automatically

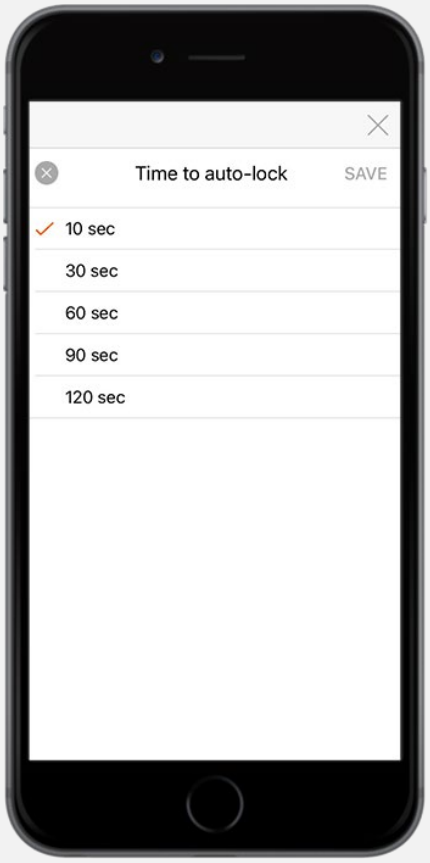

Customized Sound and LED light (Bluetooth connected)

Sound

Settings > Sound

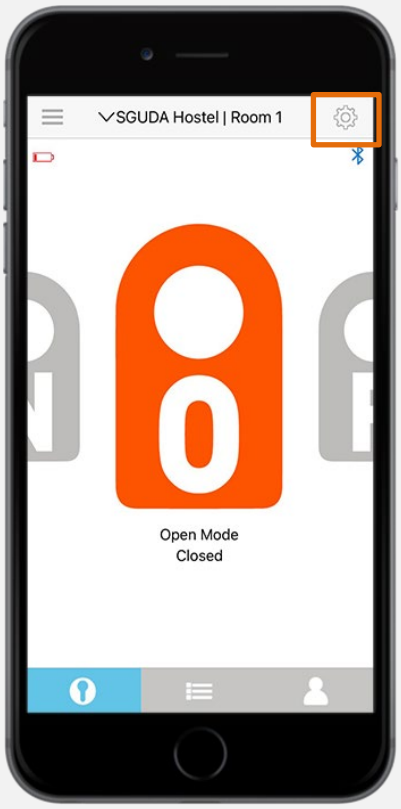

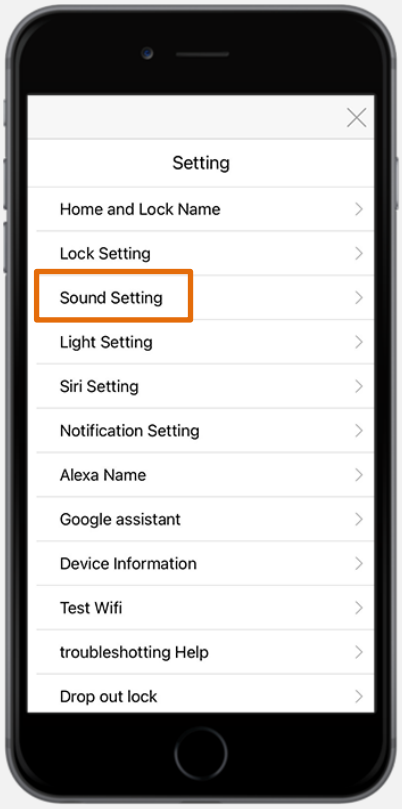

Customized sound when unlock the door

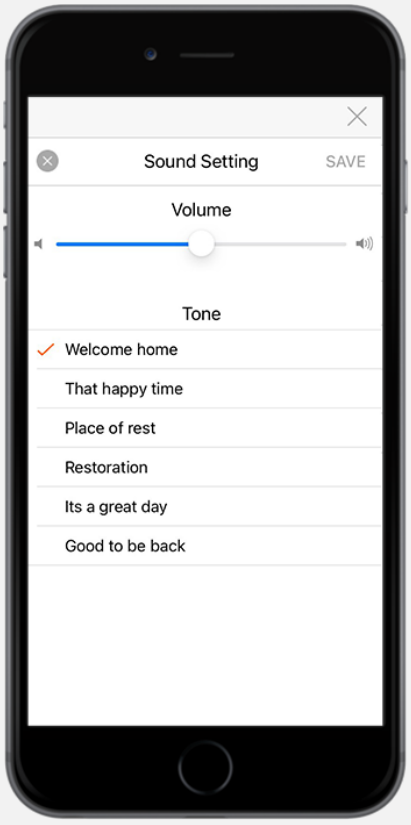

LED Light

Settings>Light Setting

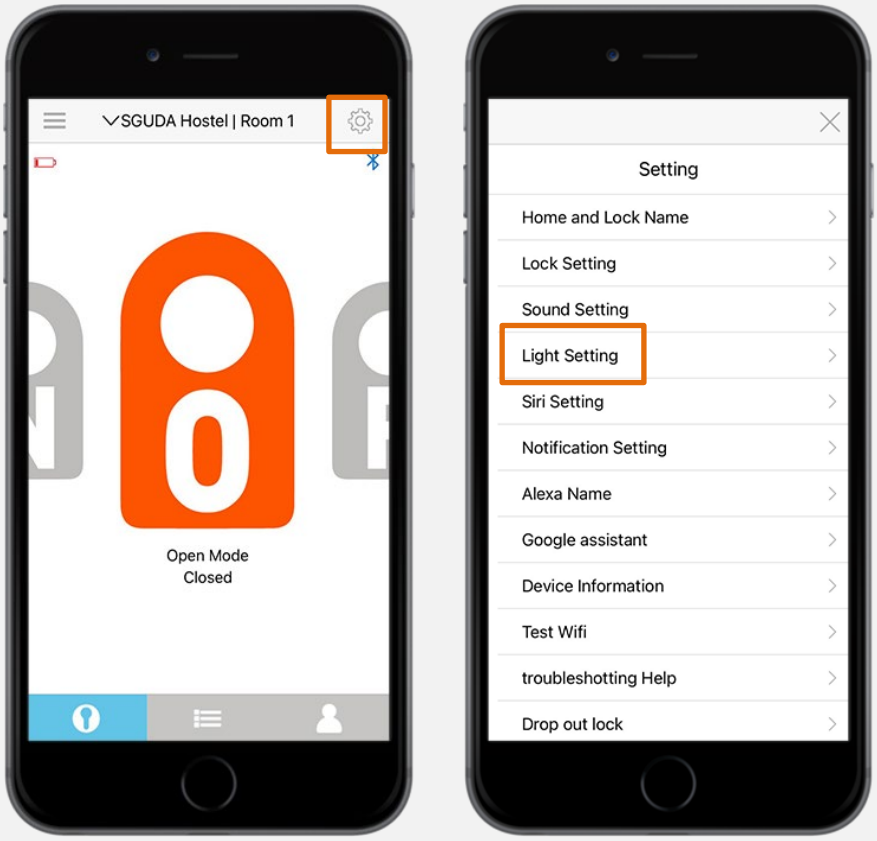

Customized LED light options

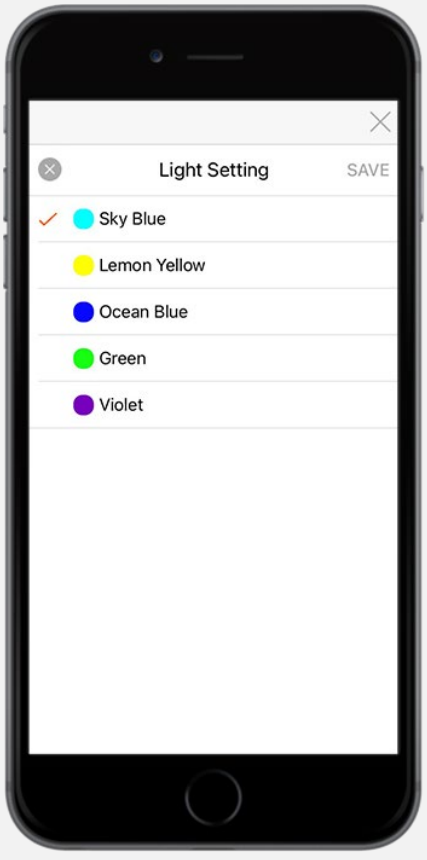

S/N number

Settings>Device information

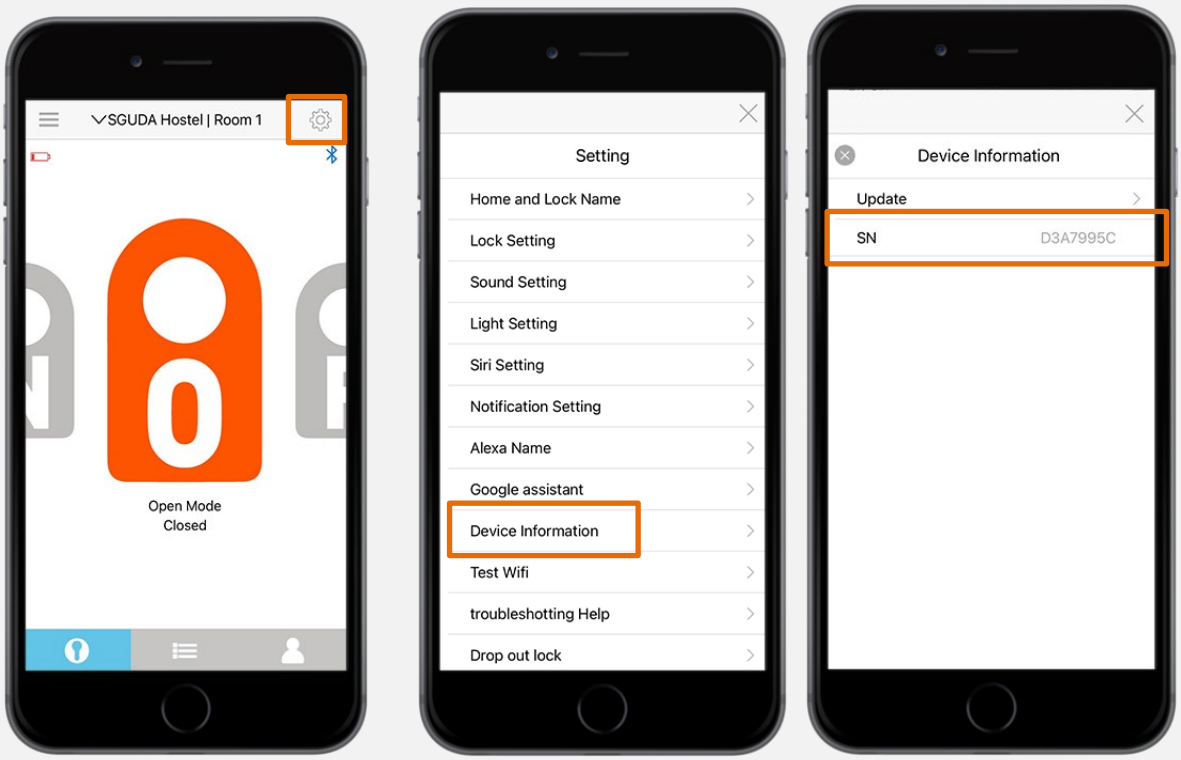

Siri, Alexa, Google Assistant

Siri

1. Settings > Siri Setting

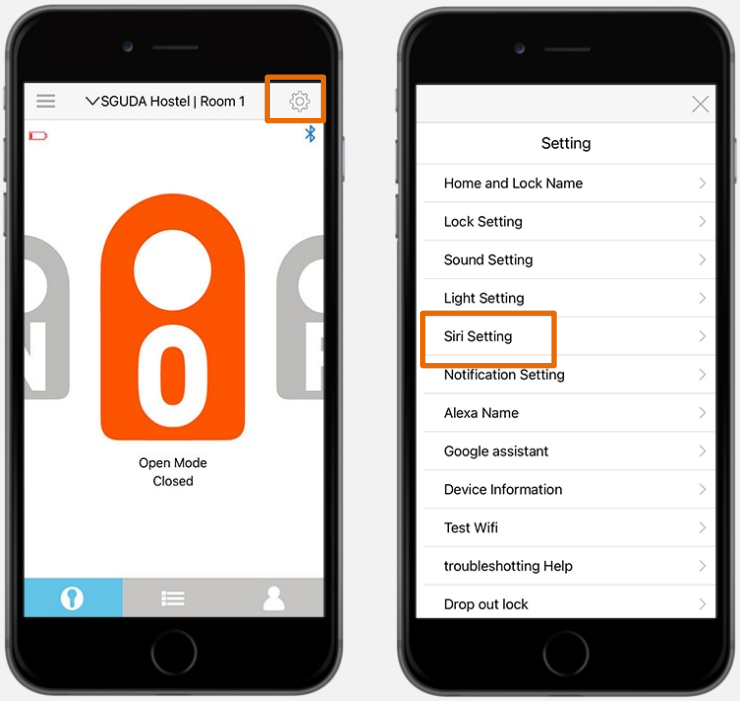

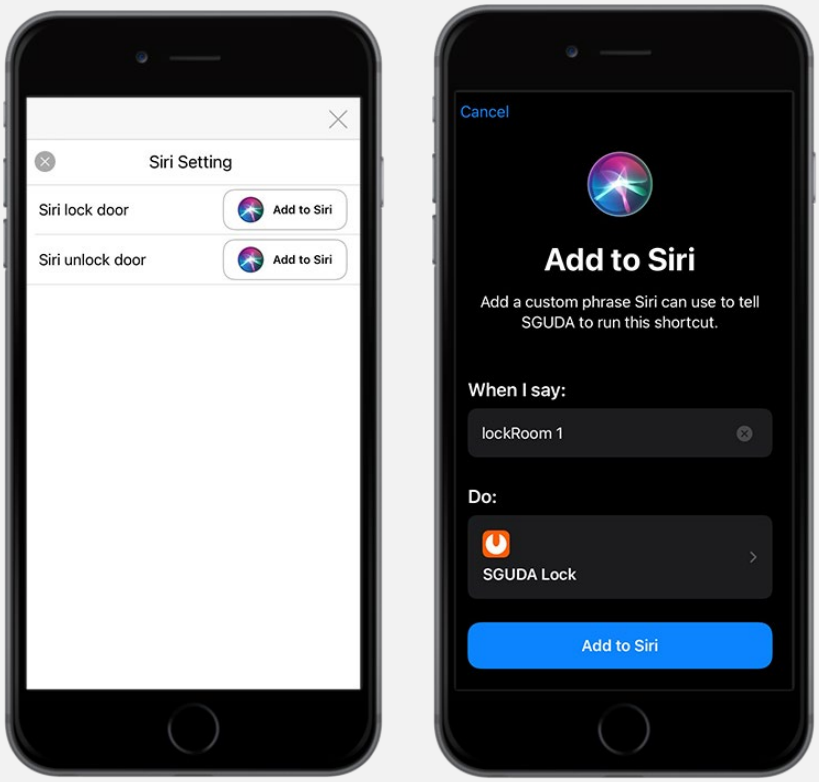

Alexa

Download the Amazon Alexa app before the following instructions

1. Settings > Alexa > Set a Name

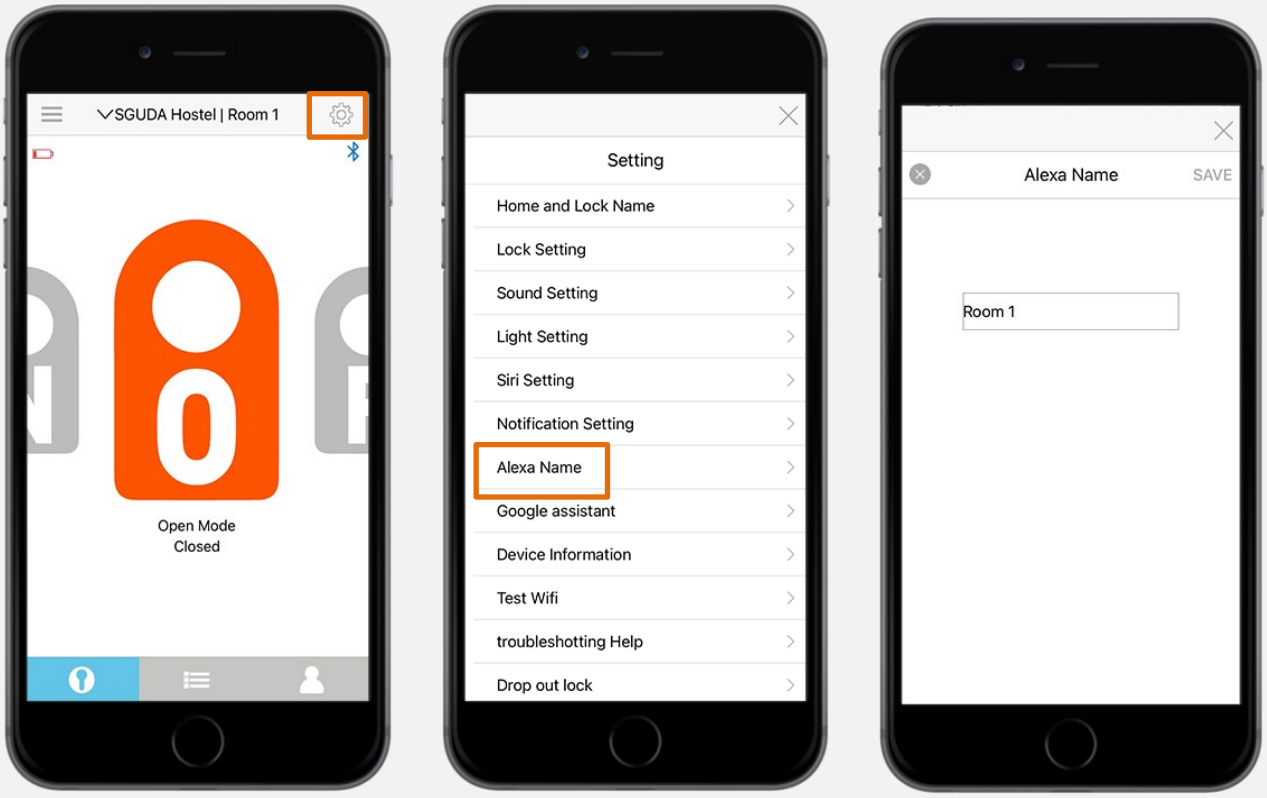

2. Open the Amazon Alexa app > More > Skills and Games

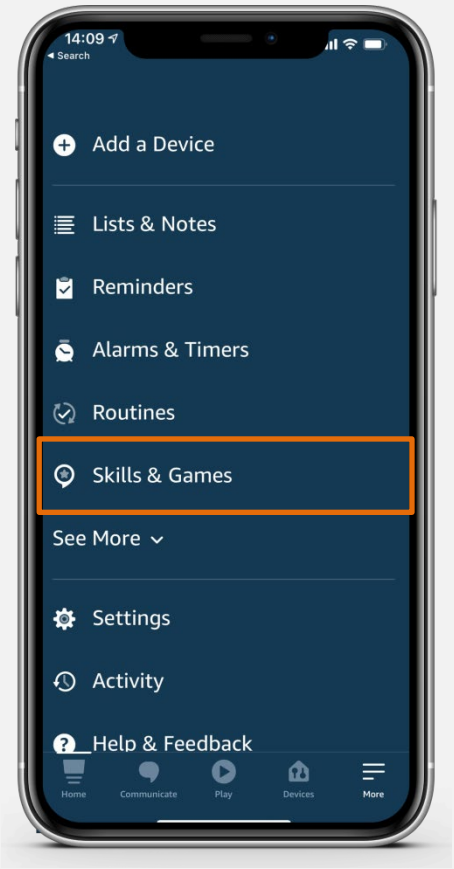

3. Go to Search on the top right corner > Search “SGUDA”

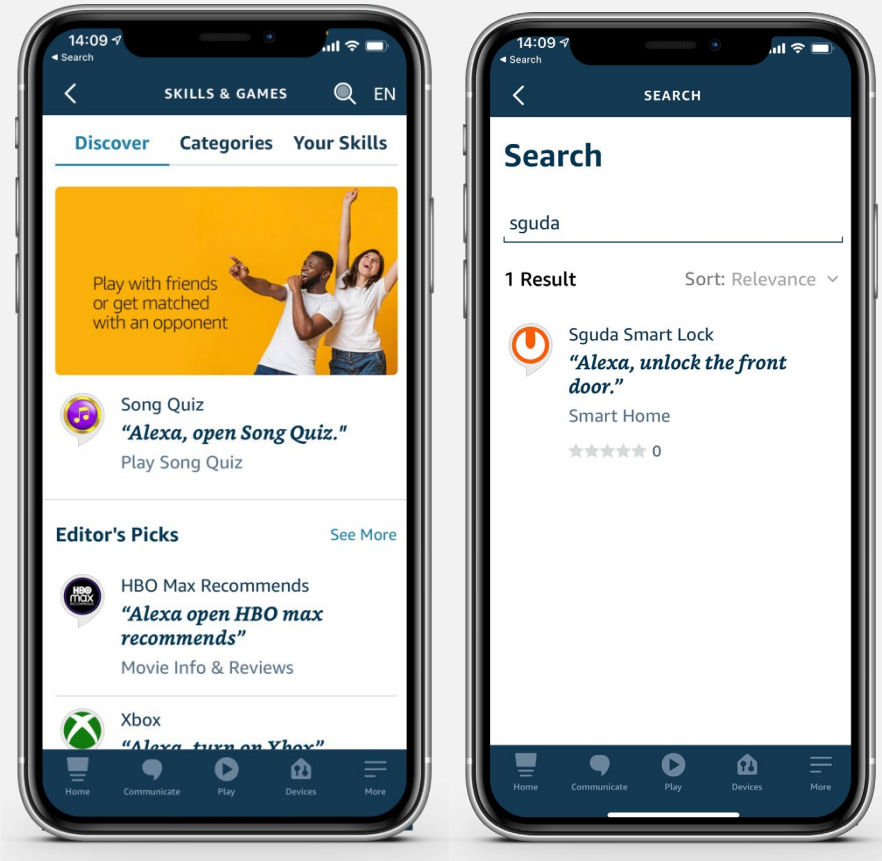

4. Enable to use > Login to your SGUDA account

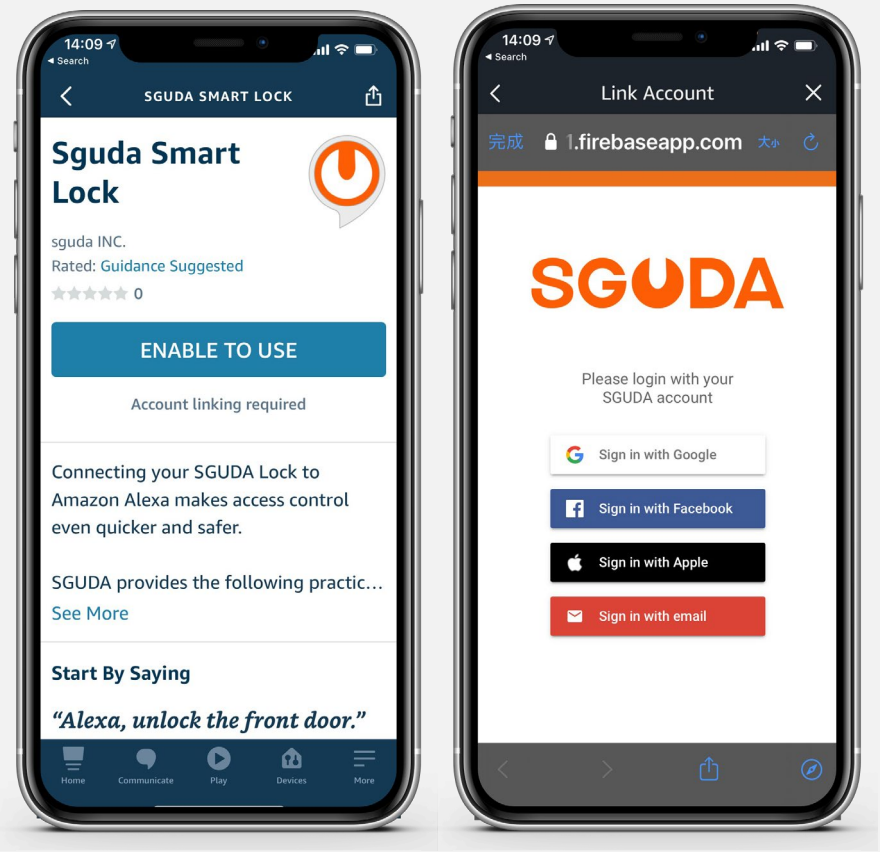

5. Successfully linked the account > Close

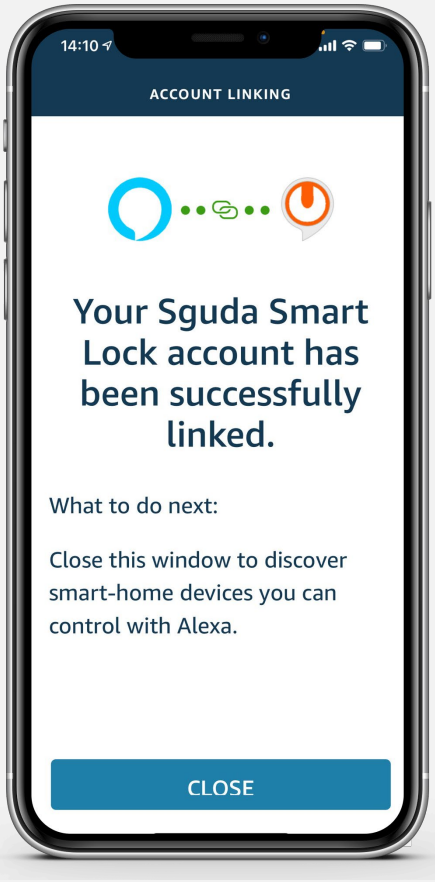

6. Linking your device to SGUDA U-Lock: Tap “Discover Device”

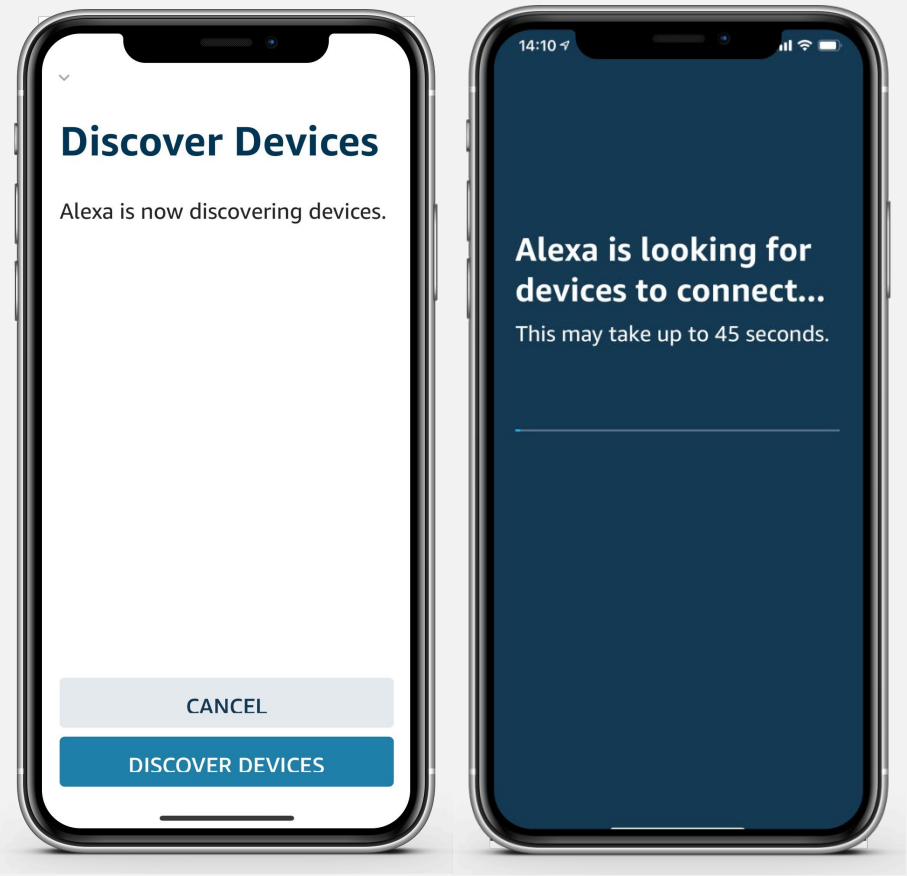

Google Assistant

Download the **Google Home** app before following the instructions

Settings > Google Assistant

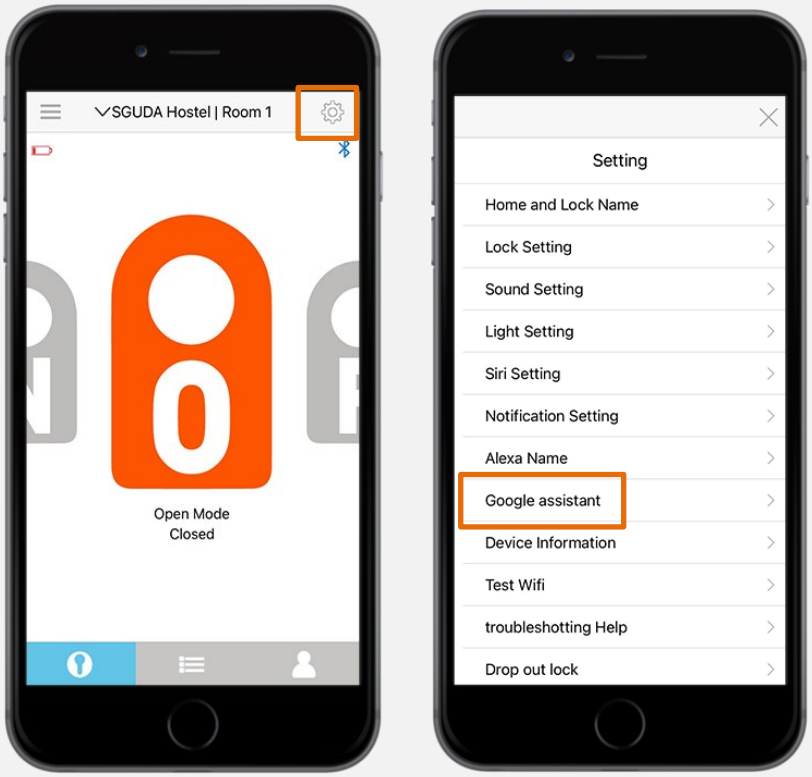

2. Set a code for the Google Home app > SAVE

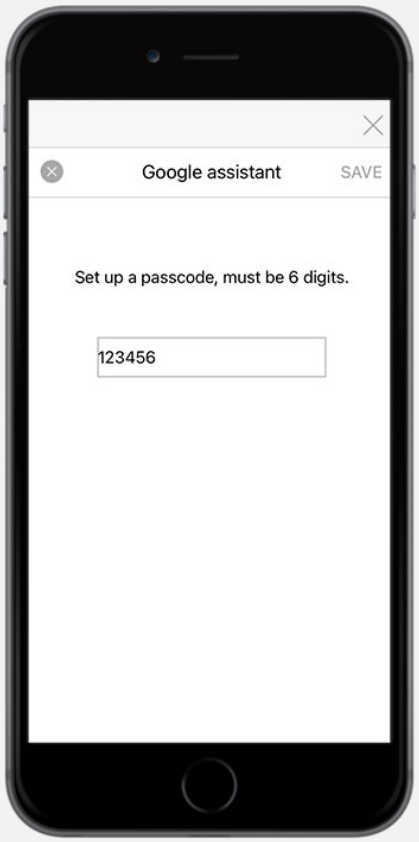

3. Open the Google Home app > Get started > Select and login to your Google account

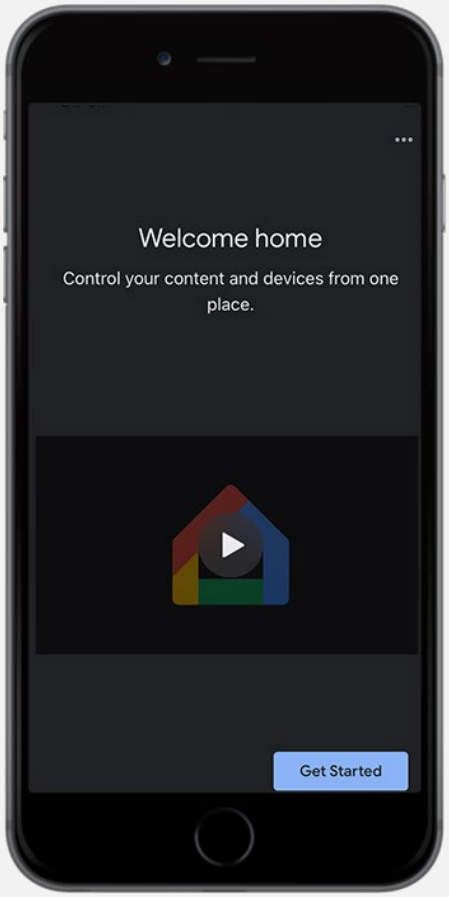

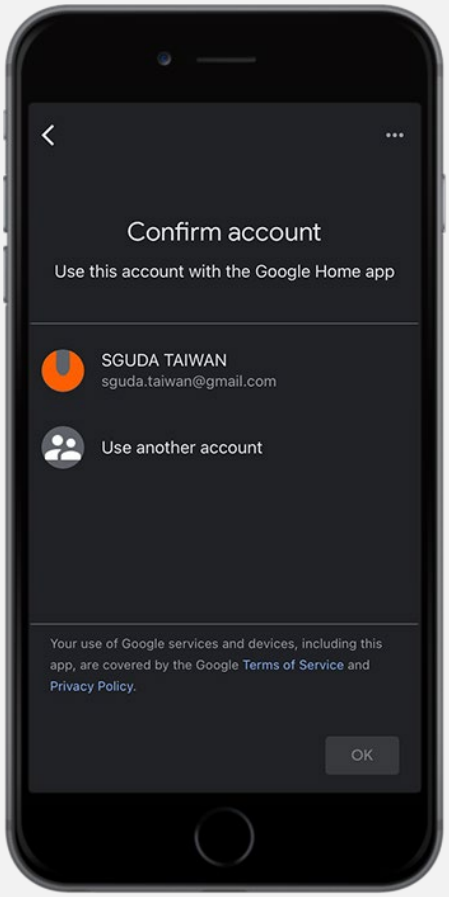

4. Tap + > Set up a device > Works with Google

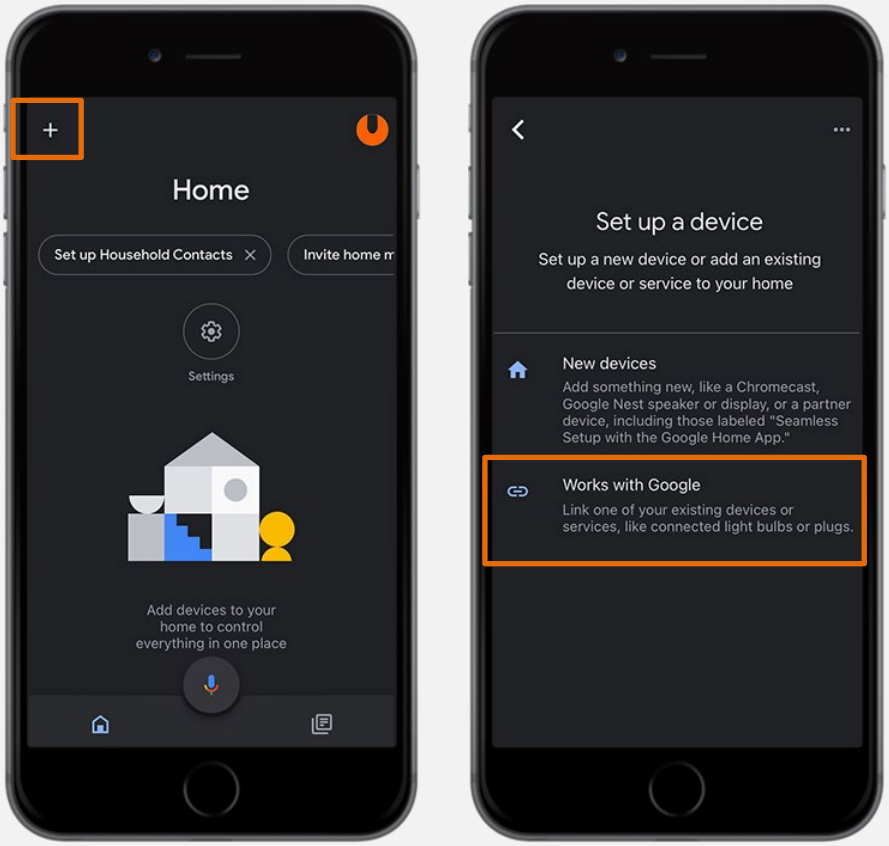

5. Add devices:

Search "SGUDA" > add SGUDA Lock

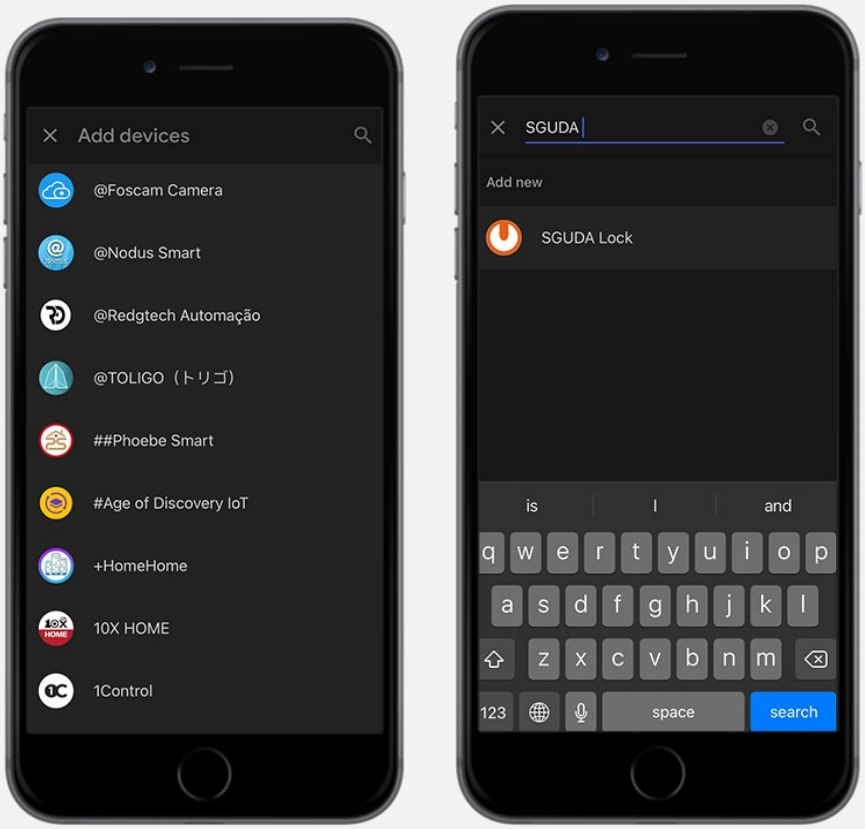

6. Sign in with your SGUDA account > Choose a device > Next

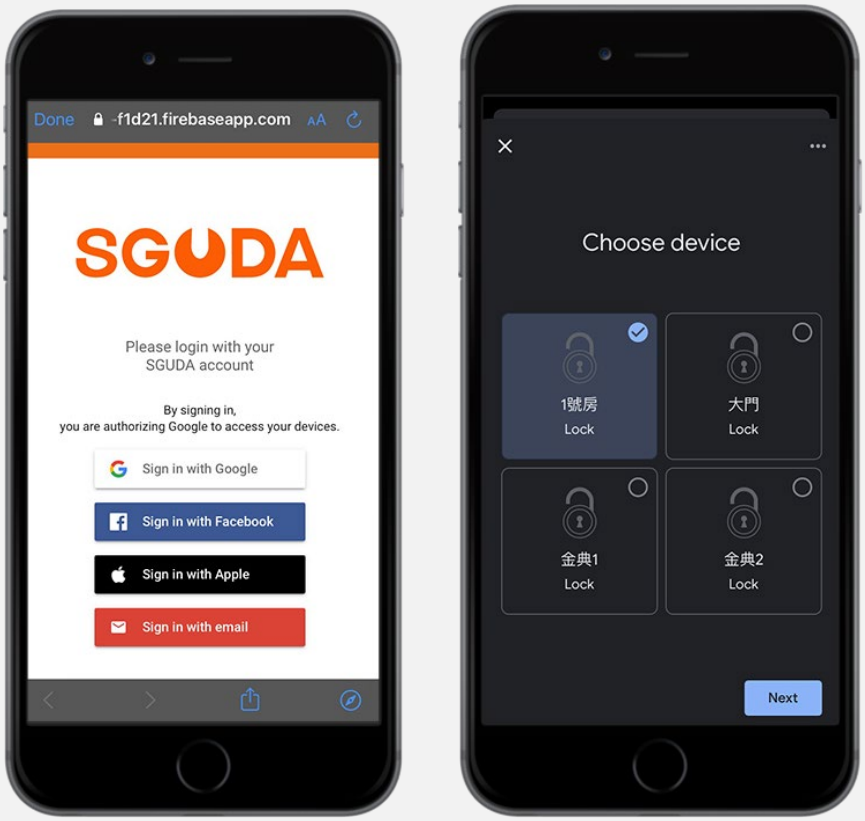

7. Choose a home > Choose a location for your lock>Next

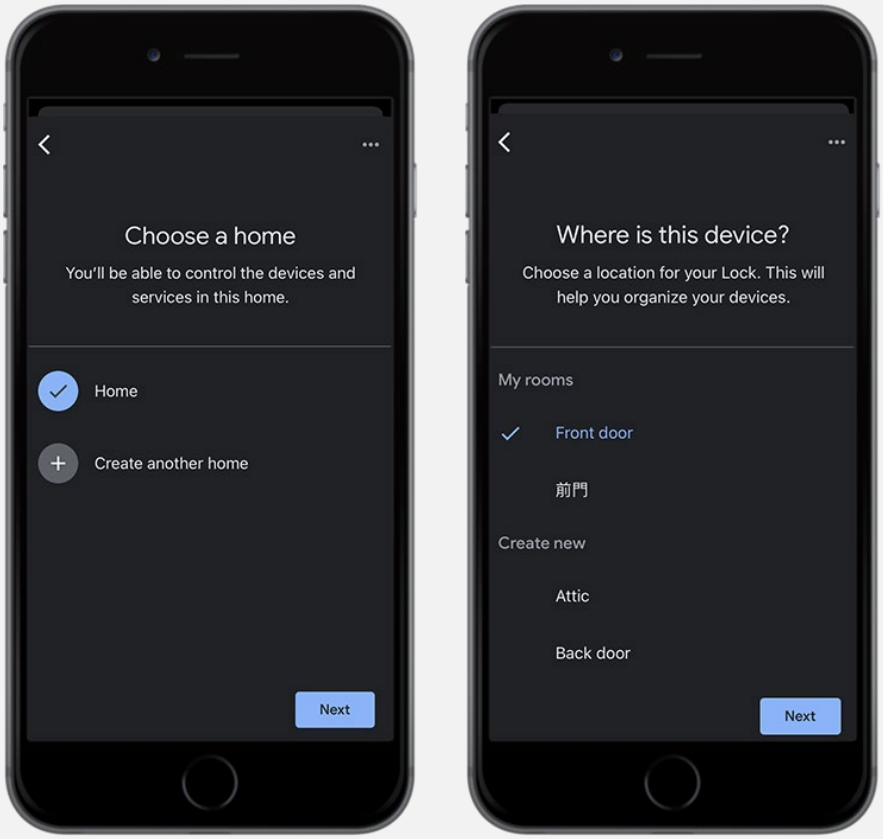

8. All set!

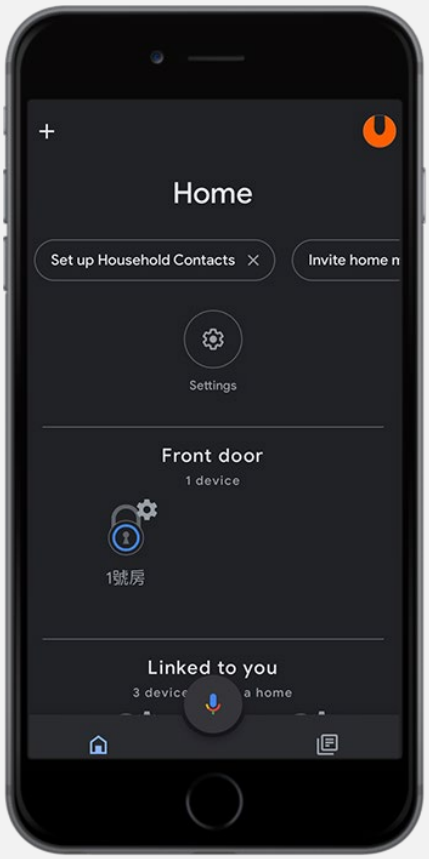

9. Testing your Google Assistant

"Ok Google, open _____"(your lock name)

Now you will be asked a code "123456" that you have set in the SGUDA app (step 2)

Notification Setting

1. Settings >Notifications

You can turn on/off the notifications as below

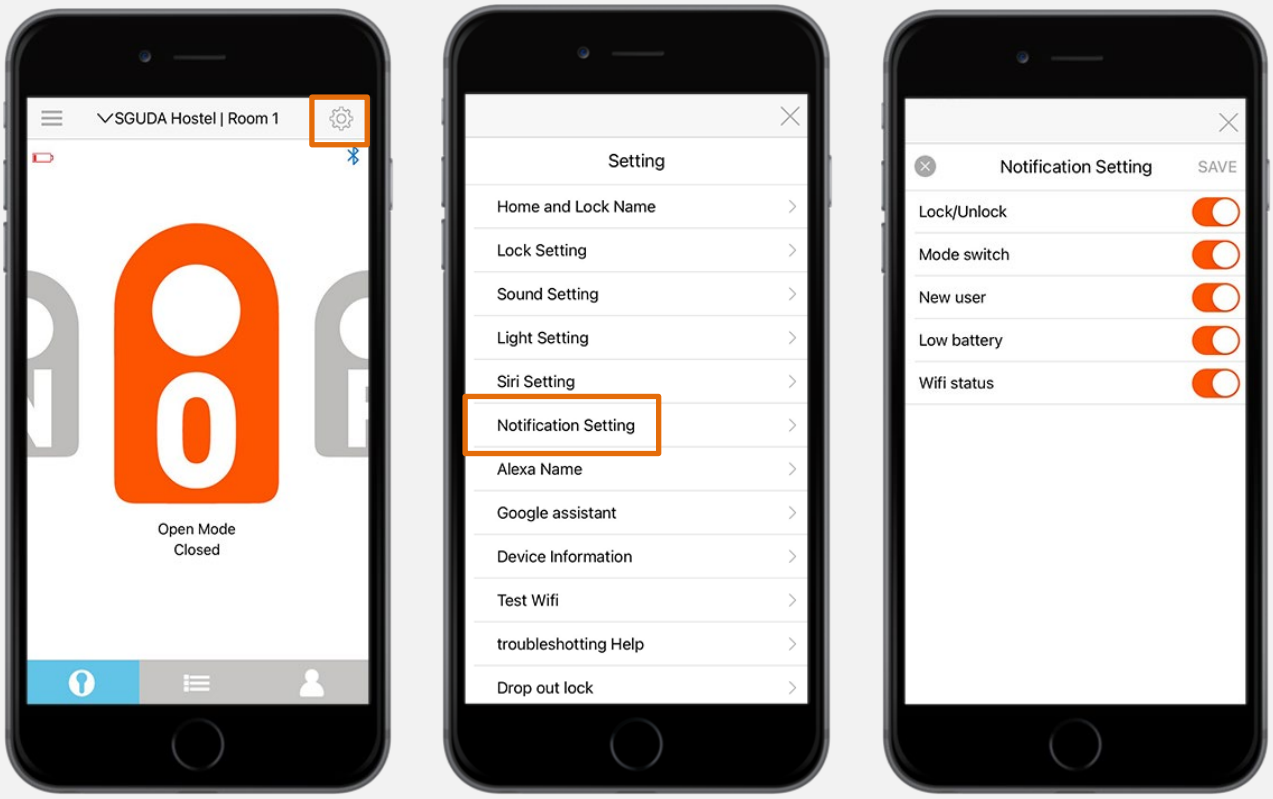

Update Bluetooth and Wifi

Bluetooth

1.Go to Settings > Device Information

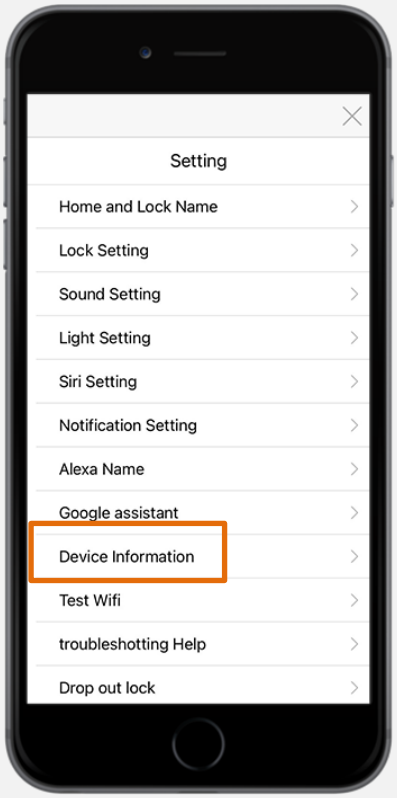

2. Select "Update" > Bluetooth > Download > Next

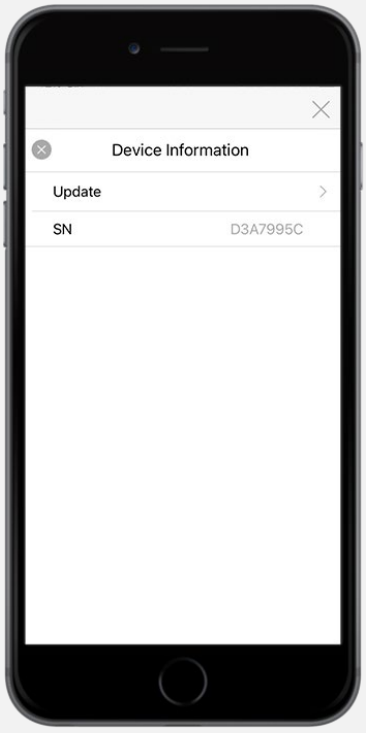

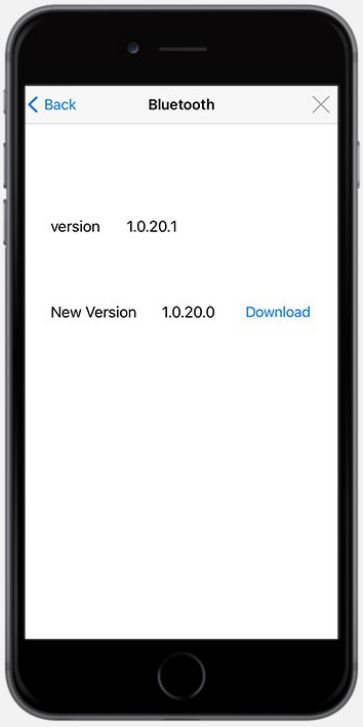

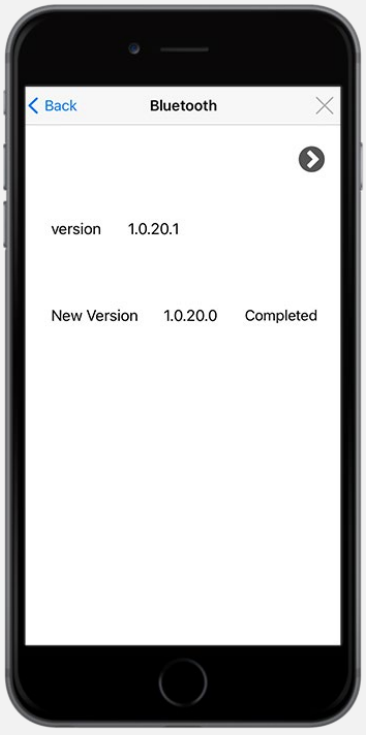

3. Remove the battery and hold the reset button > resume the power > the lock will start flashing white light (into OTA mode) > Next

4. OTA mode: Select "Dfutarg" (refresh if it doesn't show up)

6. Updating completed > tap "X" to exit

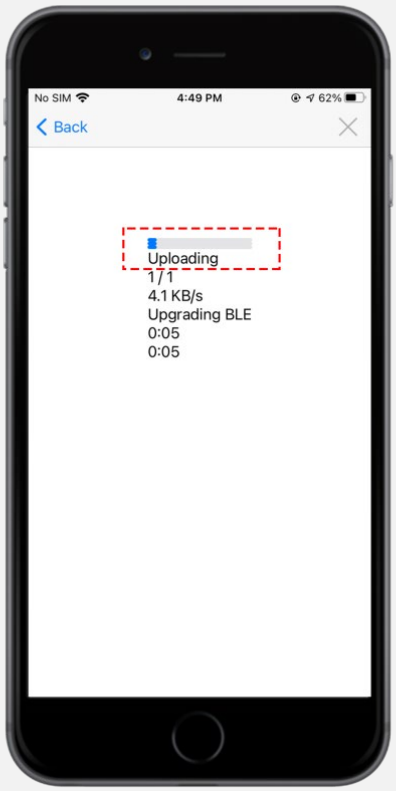

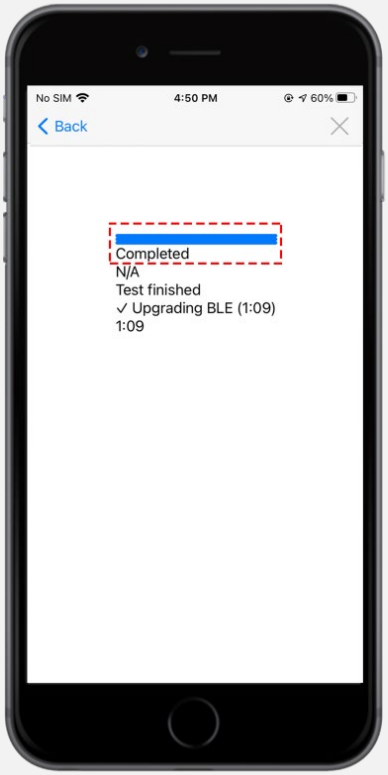

Wifi

1. Go to Settings > Device Information

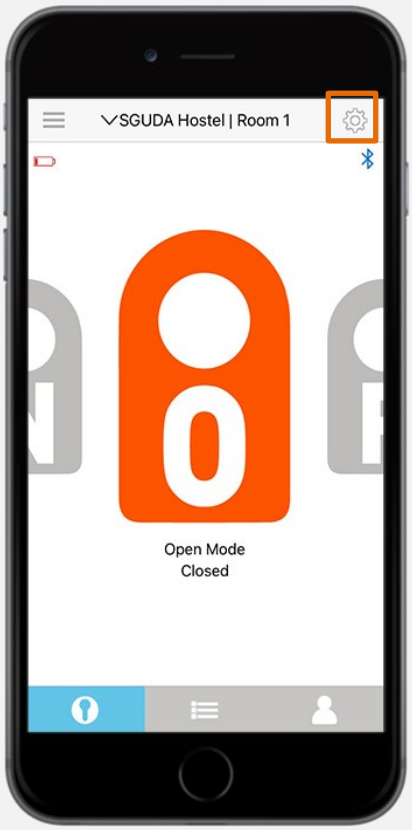

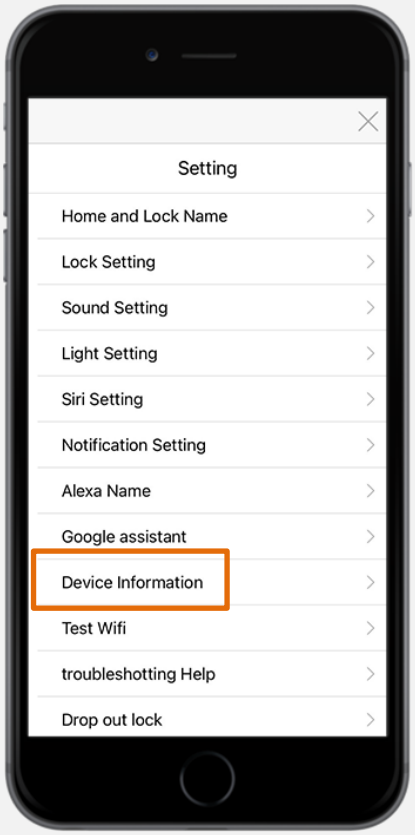

2. Select "Update" > Wifi > update

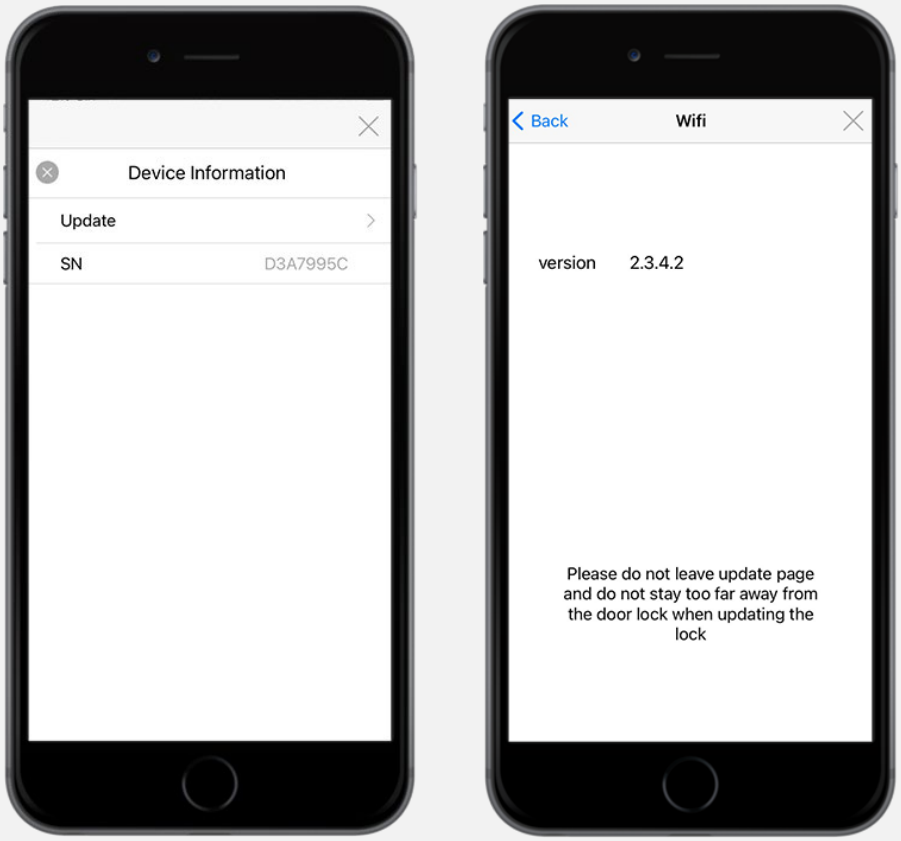

3. Updating

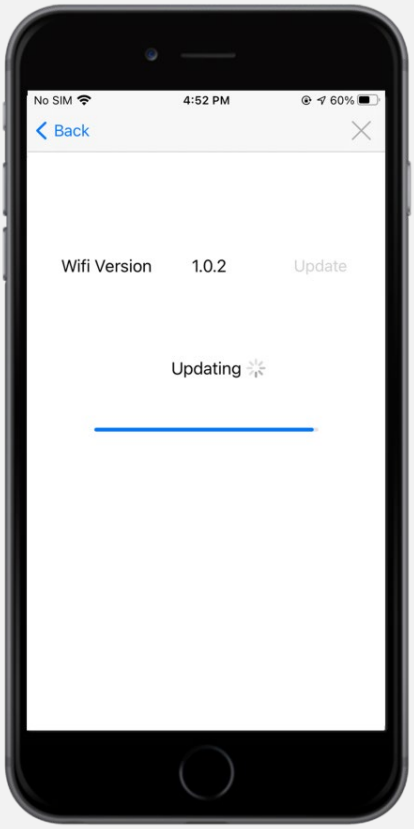

9. Make sure to restart the power

Unlink U-Lock

1. Go to Settings > Unlink

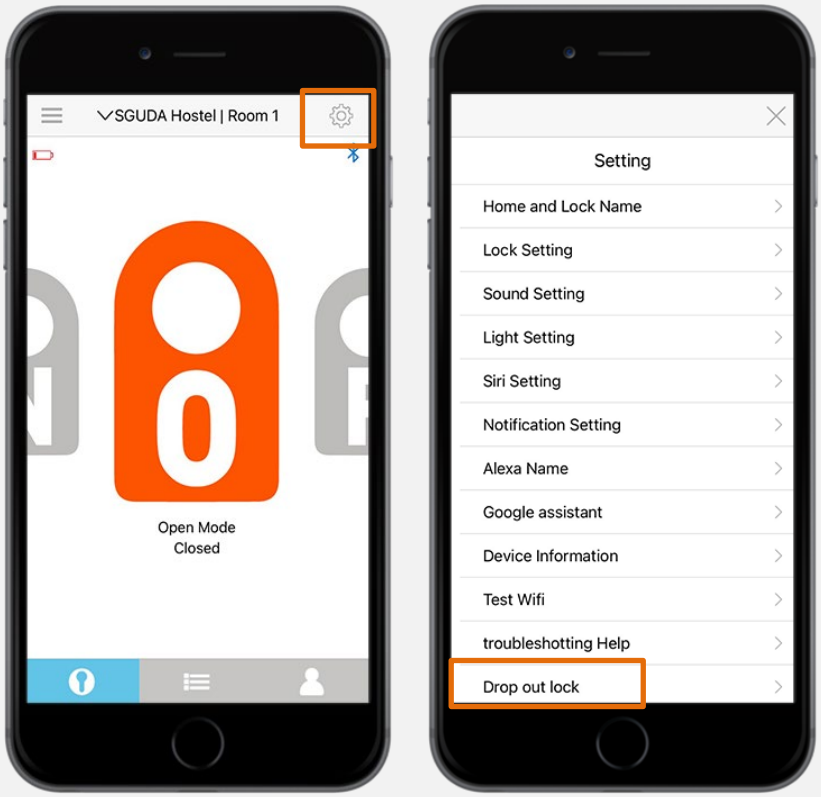

2. Check the box to unlink, the lock will flash red light when you unlink successfully

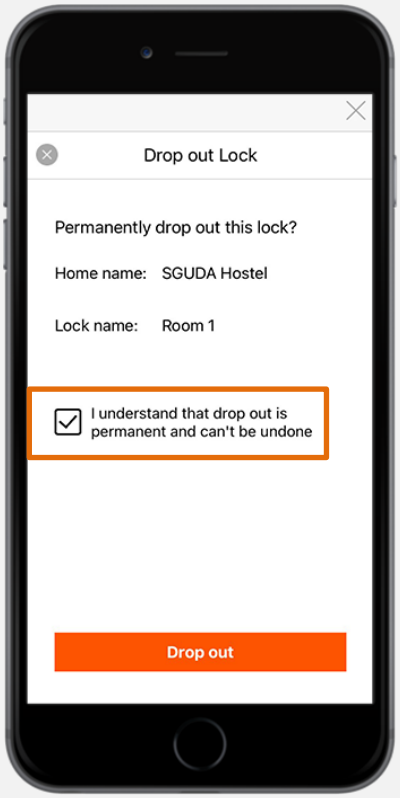

Reset U-Lock

1. Remove the cover and press Reset button for 5 seconds

2. tap the random 4 digits on the keypad > Reset complete (the lock will flash red light)

SGUDA

www.SGUDA.com

SGUDA.ADS@gmail.com

12F.-10, Ln. 256, Sec. 2, Xitun Rd., Xitun Dist., Taichung City 407 Taiwan